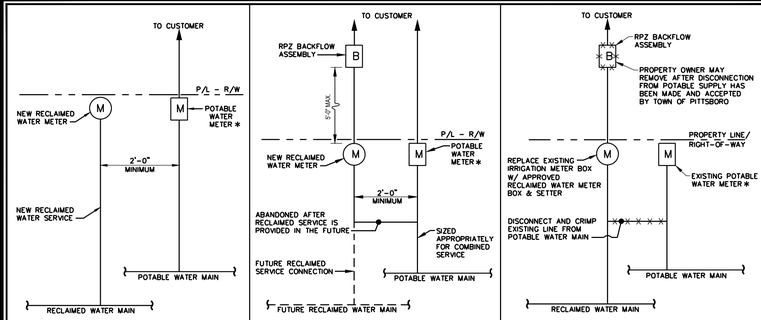

SCENARIO 1
RECLAIMED SERVICE CONNECTION
(NEW INSTALLATION)

SCENARIO 2
PRESENT POTABLE IRRIGATION CONNECTION WHERE RECLAIMED SERVICE IS NOT YET AVAILABLE

SCENARIO 3
RETROFIT OF EXISTING IRRIGATION METER ASSEMBLY FROM POTABLE TO RECLAIMED SERVICE

*NOTES:
1. POTABLE WATER METER SHALL BE FITTED WITH DUAL CARTRIDGE CHECK VALVE.
2. METERS ARE TO BE PLACED IMMEDIATELY INSIDE OF R/W OR UTILITY EASEMENT LINE.
3. ALL PIPE AND APPURTENANCES LOCATED OUTSIDE OF THE RIGHT-OF-WAY OR EASEMENT ARE MAINTAINED BY THE PROPERTY OWNER.

STANDARD RECLAIMED WATER SERVICE CONNECTIONS IN DEFINED RECLAIMED SERVICE AREAS

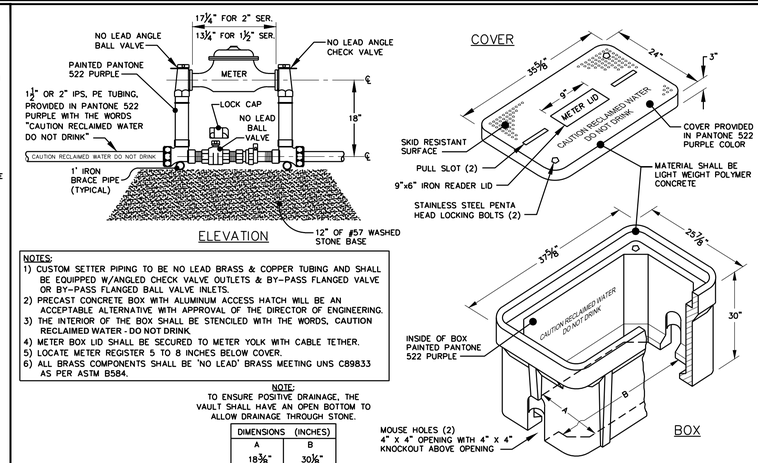

NOTES:
1) CUSTOM SETTER PIPING TO BE NO LEAD BRASS & COPPER TUBING AND SHALL BE EQUIPPED W/ANGLED CHECK VALVE OUTLETS & BY-PASS FLANGED VALVE OR BY-PASS FLANGED BALL VALVE INLETS.
2) PRECAST CONCRETE BOX WITH ALUMINUM ACCESS HATCH WILL BE AN ACCEPTABLE ALTERNATIVE WITH APPROVAL OF THE DIRECTOR OF ENGINEERING.
3) THE INTERIOR OF THE BOX SHALL BE STENCILED WITH THE WORDS, CAUTION RECLAIMED WATER - DO NOT DRINK
4) METER BOX LID SHALL BE SECURED TO METER YOLK WITH CABLE TETHER.
5) LOCATE METER REGISTER 5 TO 8 INCHES BELOW COVER.
6) ALL BRASS COMPONENTS SHALL BE 'NO LEAD' BRASS MEETING UNS C89833 AS PER ASTM B584.

NOTE:
TO ENSURE POSITIVE DRAINAGE, THE VAULT SHALL HAVE AN OPEN BOTTOM TO ALLOW DRAINAGE THROUGH STONE.

DIMENSIONS	(INCHES)
A	B
18⅜"	30⅛"

STANDARD $1\frac{1}{2}$" & 2" RECLAIMED WATER METER INSTALLATION & VAULT

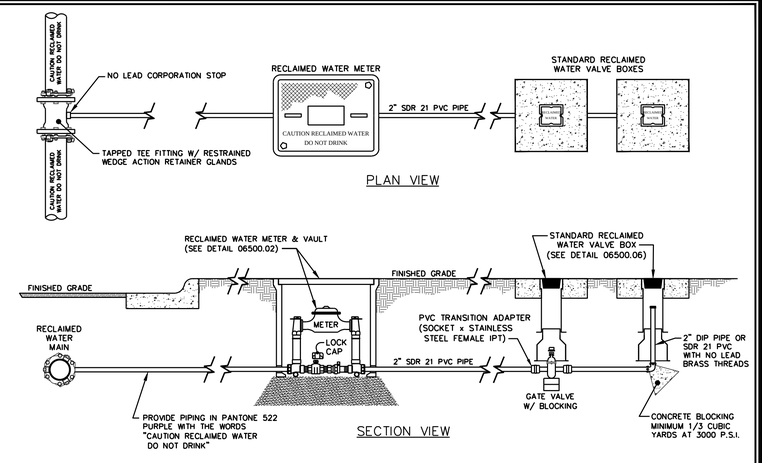

STANDARD RECLAIMED WATER BLOW-OFF ASSEMBLY, TYPE 1 (SURFACE DISCHARGE)

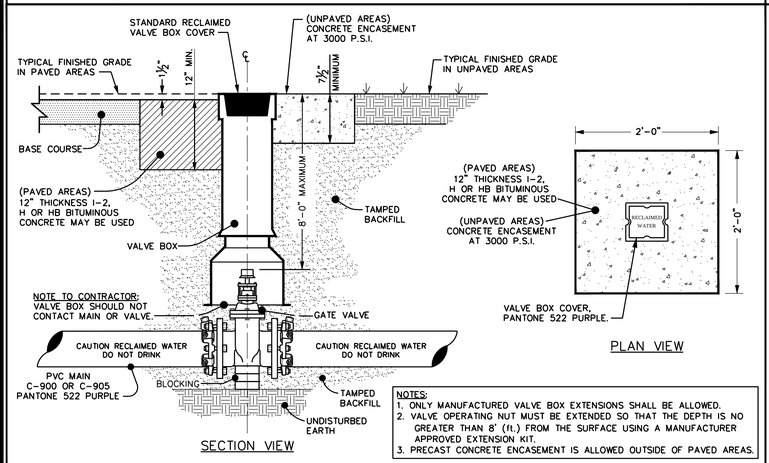

NOTES:
1. ONLY MANUFACTURED VALVE BOX EXTENSIONS SHALL BE ALLOWED.
2. VALVE OPERATING NUT MUST BE EXTENDED SO THAT THE DEPTH IS NO GREATER THAN 8' (ft.) FROM THE SURFACE USING A MANUFACTURER APPROVED EXTENSION KIT.
3. PRECAST CONCRETE ENCASEMENT IS ALLOWED OUTSIDE OF PAVED AREAS.

RECLAIMED WATER VALVE BOX INSTALLATION

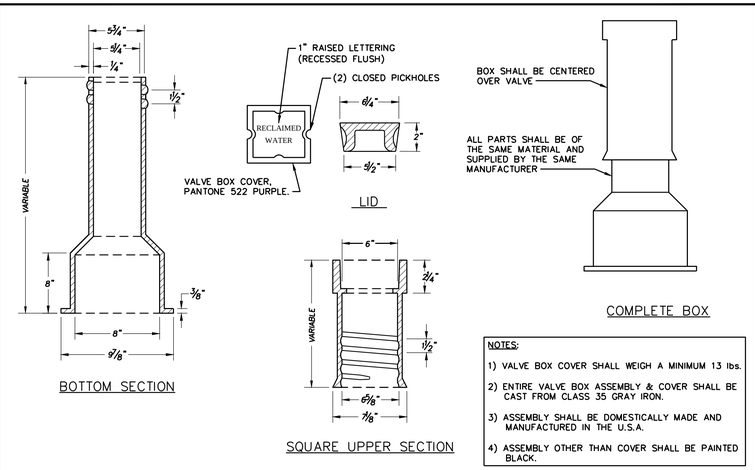

NOTES:
1) VALVE BOX COVER SHALL WEIGH A MINIMUM 13 lbs.
2) ENTIRE VALVE BOX ASSEMBLY & COVER SHALL BE CAST FROM CLASS 35 GRAY IRON.
3) ASSEMBLY SHALL BE DOMESTICALLY MADE AND MANUFACTURED IN THE U.S.A.
4) ASSEMBLY OTHER THAN COVER SHALL BE PAINTED BLACK.

STANDARD VALVE BOX (FOR RECLAIMED WATER)

MAIN SIZE	END PIPE SIZE
4" - 8"	2" BLOW-OFF
12" & GREATER	AS APPROVED BY ENGINEERING DEPT.

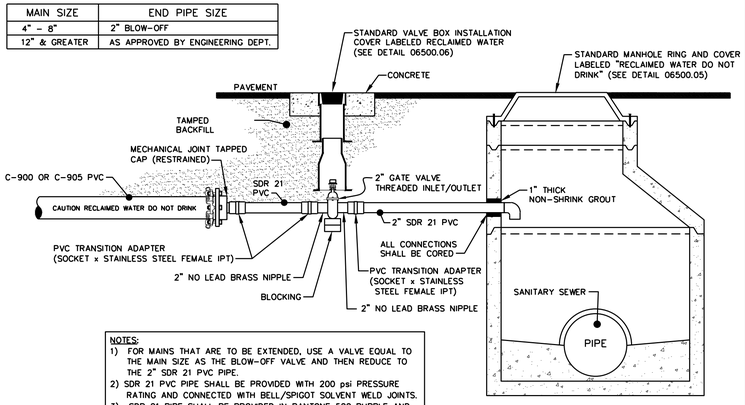

NOTES:
1) FOR MAINS THAT ARE TO BE EXTENDED, USE A VALVE EQUAL TO THE MAIN SIZE AS THE BLOW-OFF VALVE AND THEN REDUCE TO THE 2" SDR 21 PVC PIPE.
2) SDR 21 PVC PIPE SHALL BE PROVIDED WITH 200 psi PRESSURE RATING AND CONNECTED WITH BELL/SPIGOT SOLVENT WELD JOINTS.
3) SDR 21 PIPE SHALL BE PROVIDED IN PANTONE 522 PURPLE AND LABELED "CAUTION RECLAIMED WATER DO NOT DRINK".
4) ALL BRASS COMPONENTS SHALL BE 'NO LEAD' BRASS MEETING UNS C89833 AS PER ASTM B584.

STANDARD RECLAIMED WATER 2" BLOW-OFF ASSEMBLY

APPROVED FOR CONSTRUCTION

TOWN OF PITTSBORO

WithersRavenel
Engineers | Planners | Surveyors
115 MacKenan Drive | Cary, NC 27511 | t: 919.469.3340 | license #: C-0832 | www.withersravenel.com

CHATHAM PARK
SECTION 5.1
PITTSBORO, CHATHAM COUNTY, NORTH CAROLINA

RECLAIMED WATER DETAILS

Job No.	02150098.12	Drawn By	JCI
Date	11/07/16	Designer	JCI

NORTH CAROLINA PROFESSIONAL ENGINEER SEAL 19882 JOHN C. HINATOV
PRELIMINARY
NOT APPROVED FOR CONSTRUCTION

Revisions

Sheet No.
10.3

K:\15\15-0009\150098.12 CP Sec 5.4 Collector Rd\CAD\Construction\Drawings\10.1 - 10.5 DETAILS.dwg - Friday, November 04, 2016 3:50:28 PM - HAMILTON, AUSTIN