K:\15\15-0090\150098.12-CP Sec 5.6 Collector Rd\CAD\Construction Drawings\10.1 - 10.5 DETAILS.dwg- Friday, November 04, 2016 3:46:09 PM - HAMILTON, AUSTIN

BRICK CATCH BASIN (840.01, Sheet 1 of 2)

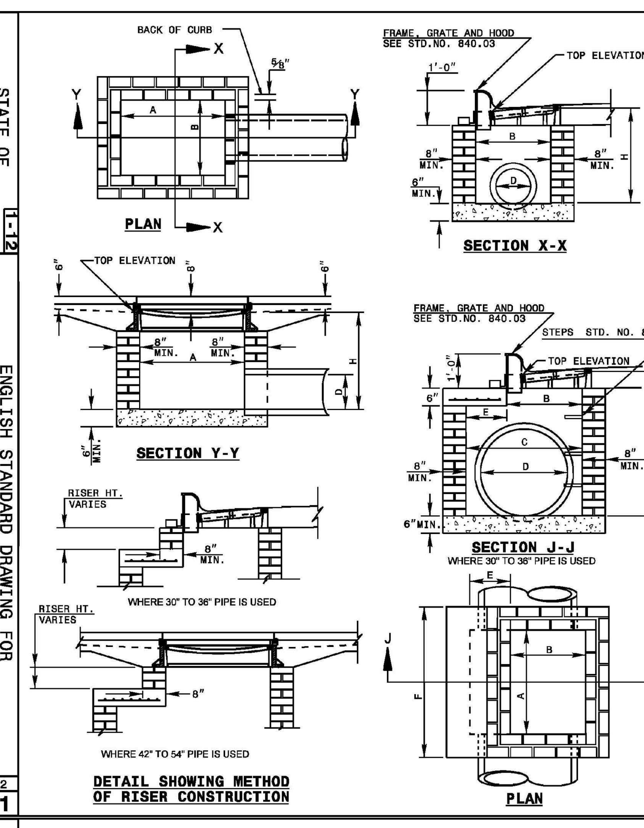

NOTES: MORTAR JOINTS ½" +/- ⅛" THICK.
USE CLASS "B" CONCRETE THROUGHOUT.
USE FORMS FOR CONSTRUCTION OF THE BOTTOM SLAB.
DEDUCT FOR PIPE(S) FROM TOTAL CU. YDS. OF BRICK MASONRY.
USE #4 BAR DOWELS AT 12" CENTERS.
PROVIDE ALL CATCH BASINS OVER 3'-6" IN DEPTH WITH STEPS 12" ON CENTER. USE STEPS WHICH COMPLY WITH STD. DRAWING 840.66.
USE TYPE "E", "F" AND "G" GRATES UNLESS OTHERWISE INDICATED.
USE BRICK OR CONCRETE BLOCK WHICH COMPLIES WITH THE REQUIREMENTS OF SECTION 840 OF THE STANDARD SPECIFICATIONS.
IF REINFORCED CONCRETE PIPE IS SET IN BOTTOM SLAB OF BOX, ADD TO SLAB AS SHOWN ON STD. NO. 840.00.
FOR 8'-0" IN HEIGHT OR LESS, USE 8" WALL. OVER 8'-0" IN HEIGHT, USE 12" WALL TO 6'-0" FROM TOP OF WALL AND 8" WALL FOR THE REMAINING 6'-0". QUANTITES TO BE ADJUSTED ACCORDINGLY.
CONSTRUCT WITH PIPE CROWNS MATCHING.
CHAMFER ALL EXPOSED CORNERS 1".
DRAWING NOT TO SCALE.

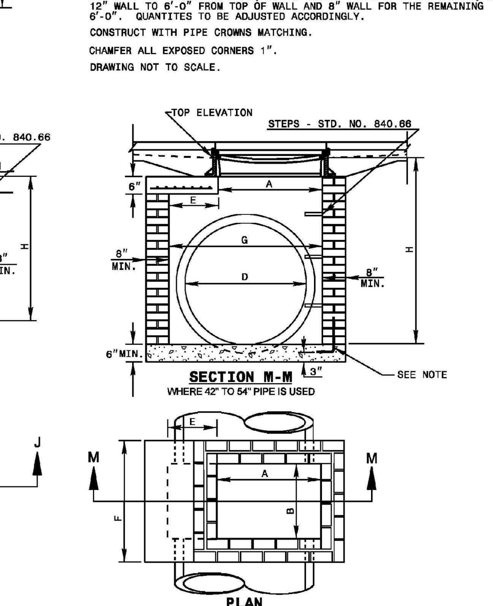

STATE OF NORTH CAROLINA DEPT. OF TRANSPORTATION DIVISION OF HIGHWAYS RALEIGH, N.C. 1-12
ENGLISH STANDARD DRAWING FOR **BRICK CATCH BASIN** 12" THRU 54" PIPE
SHEET 1 OF 2 **840.01**

BRICK CATCH BASIN (840.01, Sheet 2 of 2)

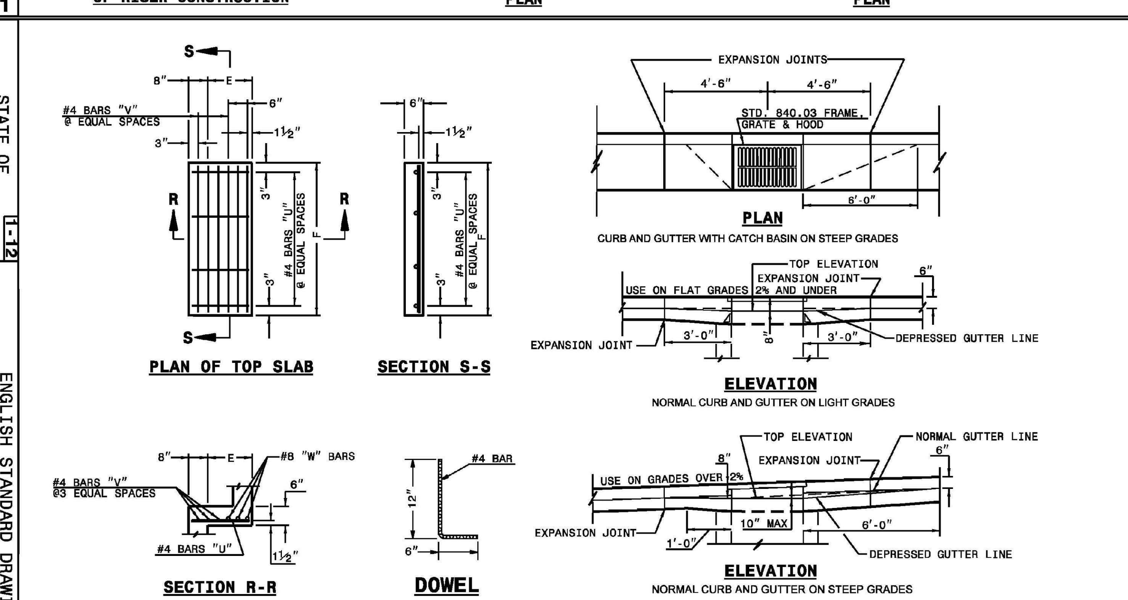

MINIMUM DIMENSIONS AND QUANTITIES FOR BRICK CATCH BASIN(BASED ON MIN. HEIGHT, H, WITH NO RISER)*																					
DIMENSIONS OF BOX AND PIPE						TOP SLAB DIMENSIONS									CU.YDS. CONC. IN BOX			BRICK MASONRY		DEDUCTIONS ONE PIPE	
PIPE	SPAN	WIDTH	WIDTH	SPAN	MIN. HEIGHT			BARS-U		BARS-V		BARS-W		TOTAL LBS.	TOP SLAB	BOTTOM SLAB	TOTAL CONC.	BRICK MSNR. IN WALLS	TOTAL BRICK AND CONCRETE		
D	A	B	C	G	H	E	F	NO.	LENGTH	NO.	LENGTH	NO.	LENGTH							C.M.	R.C.
12"	3'-0"	2'-2"	--	--	2'-9"	--	--	--	--	--	--	--	--	--	--	0.281	0.281	0.883	1.164	0.020	0.042
15"	3'-0"	2'-2"			3'-0"											0.281	0.281	0.963	1.244	0.031	0.047
18"	3'-0"	2'-2"			3'-3"											0.281	0.281	1.043	1.324	0.044	0.065
24"	3'-0"	2'-2"			3'-9"											0.281	0.281	1.204	1.485	0.078	0.121
30"	3'-0"	2'-2"	3'-4"		4'-3"	1'-2"	4'-4"	4	1'-6"	3	4'-1"	3	4'-1"	45	0.147	0.374	0.521	1.606	2.217	0.122	0.184
36"	3'-0"	2'-2"	3'-10"		4'-9"	1'-8"	4'-4"	4	2'-0"	4	4'-1"	3	4'-1"	49	0.187	0.415	0.602	1.914	2.516	0.176	0.261
42"	3'-0"	2'-2"		4'-5"	5'-3"	1'-5"	3'-6"	4	1'-9"	3	3'-3"	3	3'-3"	38	0.135	0.373	0.508	2.152	2.660	0.240	0.371
48"	3'-0"	2'-2"		5'-0"	5'-9"	2'-0"	3'-6"	4	2'-6"	4	3'-3"	3	3'-3"	41	0.173	0.410	0.583	2.415	2.998	0.313	0.477
54"	3'-0"	2'-2"		5'-7"	6'-3"	2'-7"	3'-6"	4	3'-0"	6	3'-3"	3	3'-3"	47	0.211	0.448	0.659	2.806	3.465	0.396	0.595

* RISER HAS .321 CUBIC YARDS OF BRICK MASONRY PER FOOT HEIGHT

STATE OF NORTH CAROLINA DEPT. OF TRANSPORTATION DIVISION OF HIGHWAYS RALEIGH, N.C. 1-12
ENGLISH STANDARD DRAWING FOR **BRICK CATCH BASIN** 12" THRU 54" PIPE
SHEET 2 OF 2 **840.01**

CONCRETE CATCH BASIN (840.02, Sheet 1 of 2)

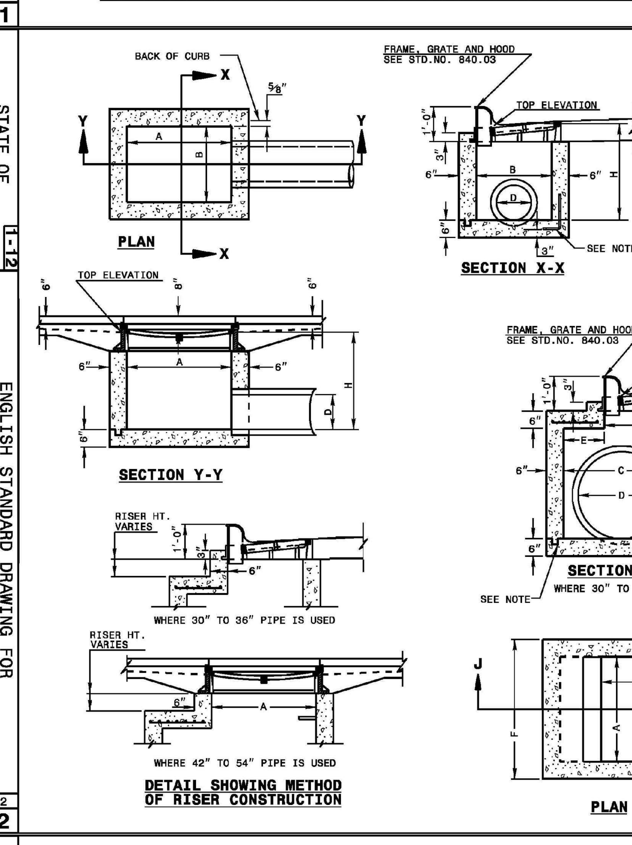

GENERAL NOTES:
USE CLASS "B" CONCRETE THROUGHOUT.
PROVIDE ALL CATCH BASINS OVER 3'-6" IN DEPTH WITH STEPS 12" ON CENTER. USE STEPS WHICH COMPLY WITH STD. DRAWING 840.66.
OPTIONAL CONSTRUCTION - MONOLITHIC POUR, 2" KEYWAY, OR #4 BAR DOWELS AT 12" CENTERS AS DIRECTED BY THE ENGINEER.
USE FORMS FOR THE CONSTRUCTION OF THE BOTTOM SLAB.
IF REINFORCED CONCRETE PIPE IS SET IN BOTTOM SLAB OF BOX, ADD TO SLAB AS SHOWN ON STD. NO. 840.00.
USE TYPE "E", "F" AND "G" GRATES UNLESS OTHERWISE INDICATED.
FOR 8'-0" IN HEIGHT OR LESS USE 6" WALLS AND BOTTOM SLAB. OVER 8'-0" TO 16'-0" IN HEIGHT USE 8" WALLS AND BOTTOM SLAB. ADJUST QUANTITIES ACCORDINGLY.
CONSTRUCT WITH PIPE CROWNS MATCHING.
CHAMFER ALL EXPOSED CORNERS 1".
DRAWING NOT TO SCALE.

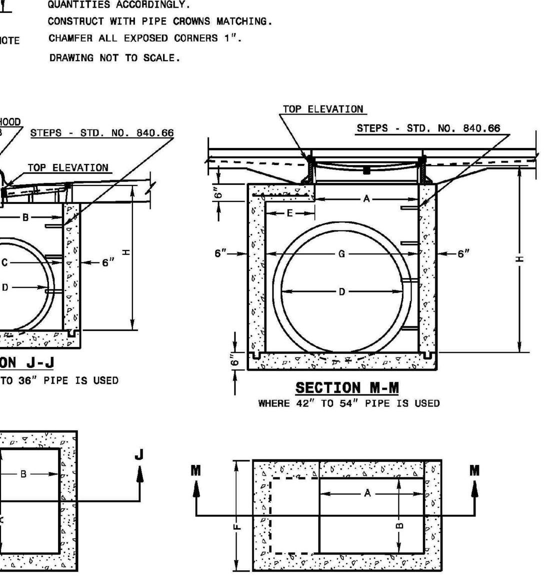

STATE OF NORTH CAROLINA DEPT. OF TRANSPORTATION DIVISION OF HIGHWAYS RALEIGH, N.C. 1-12
ENGLISH STANDARD DRAWING FOR **CONCRETE CATCH BASIN** 12" THRU 54" PIPE
SHEET 1 OF 2 **840.02**

CONCRETE CATCH BASIN (840.02, Sheet 2 of 2)

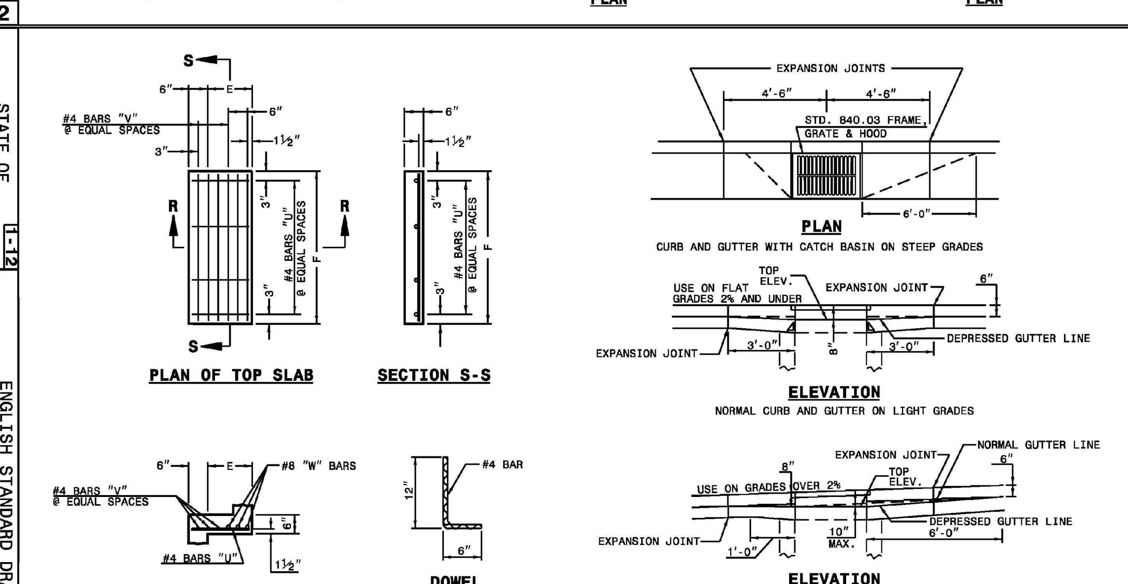

MINIMUM DIMENSIONS AND QUANTITIES FOR CONCRETE CATCH BASIN(BASED ON MIN. HEIGHT, H, WITH NO RISER) *																				
DIMENSIONS OF BOX AND PIPE						COVER DIMENSION									CU.YDS. CONC. IN BOX			DEDUCTIONS ONE PIPE	
PIPE	SPAN	WIDTH	WIDTH	SPAN	MIN. HEIGHT			BARS-U		BARS-V		BARS-W		TOTAL LBS.	TOP SLAB	BOTTOM SLAB	TOT. CONC. FOR MINIMUM HEIGHT, H		
D	A	B	C	G	H	E	F	NO.	LENGTH	NO.	LENGTH	NO.	LENGTH					C.M.	R.C.
12"	3'-0"	2'-2"	--	--	2'-9"	--	--	--	--	--	--	--	--	--	--	0.235	0.772	0.015	0.026
15"	3'-0"	2'-2"			3'-0"											0.235	0.829	0.023	0.036
18"	3'-0"	2'-2"			3'-3"											0.235	0.887	0.033	0.049
24"	3'-0"	2'-2"			3'-9"											0.235	1.001	0.059	0.085
30"	3'-0"	2'-2"	3'-4"		4'-3"	1'-2"	4'-0"	4	1'-5"	2	3'-9"	3	3'-9"	39	0.123	0.321	1.433	0.092	0.127
36"	3'-0"	2'-2"	3'-10"		4'-9"	1'-8"	4'-0"	4	1'-11"	3	3'-9"	3	3'-9"	43	0.161	0.358	1.714	0.132	0.178
42"	3'-0"	2'-2"		4'-5"	5'-3"	1'-5"	3'-2"	4	1'-8"	2	2'-11"	3	2'-11"	32	0.112	0.318	1.738	0.180	0.243
48"	3'-0"	2'-2"		5'-0"	5'-9"	2'-0"	3'-2"	4	2'-3"	3	2'-11"	3	2'-11"	35	0.145	0.352	2.052	0.235	0.317
54"	3'-0"	2'-2"		5'-7"	6'-3"	2'-7"	3'-2"	4	2'-10"	5	2'-11"	3	2'-11"	41	0.180	0.386	2.387	0.297	0.401

* RISER HAS .228 CUBIC YARDS OF CONCRETE PER FOOT HEIGHT

STATE OF NORTH CAROLINA DEPT. OF TRANSPORTATION DIVISION OF HIGHWAYS RALEIGH, N.C. 1-12
ENGLISH STANDARD DRAWING FOR **CONCRETE CATCH BASIN** 12" THRU 54" PIPE
SHEET 2 OF 2 **840.02**

FRAME, GRATES, AND HOOD (840.03, Sheet 1 of 2)

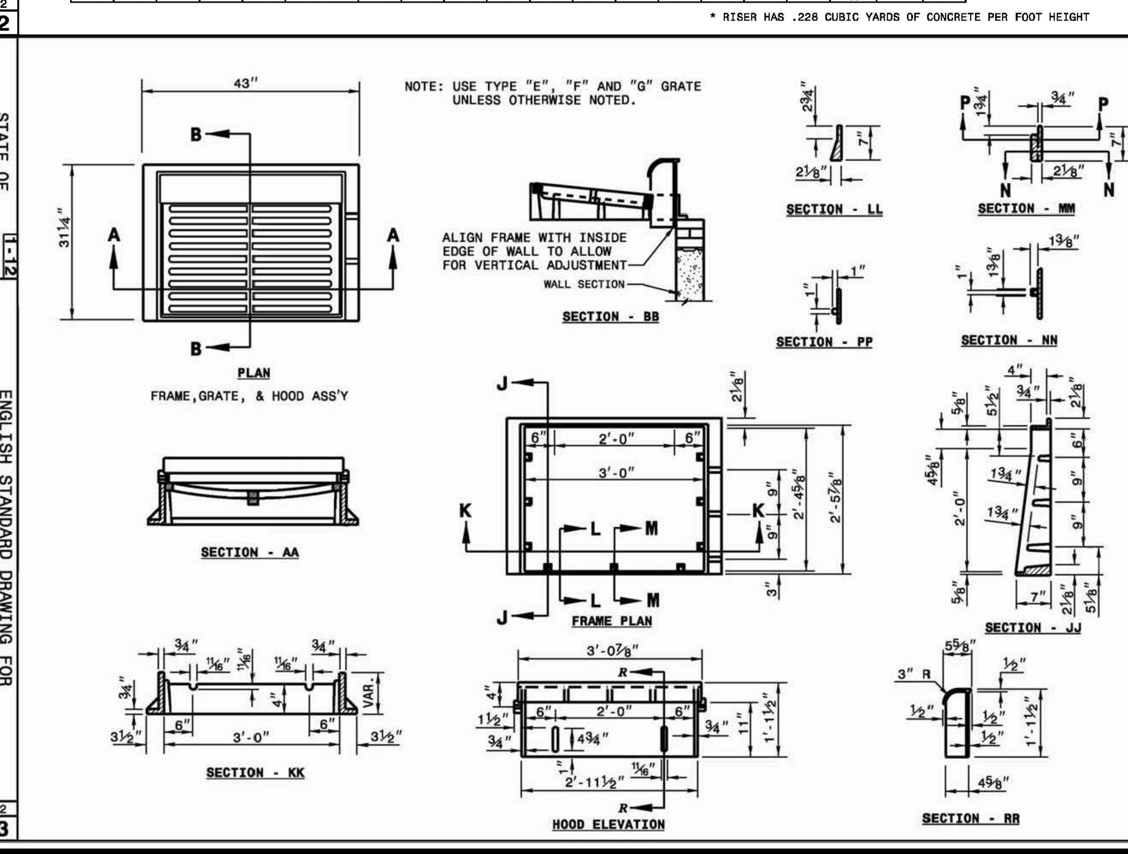

STATE OF NORTH CAROLINA DEPT. OF TRANSPORTATION DIVISION OF HIGHWAYS RALEIGH, N.C. 1-12
ENGLISH STANDARD DRAWING FOR **FRAME, GRATES, AND HOOD** FOR USE ON STANDARD CATCH BASIN
SHEET 1 OF 2 **840.03**

FRAME, GRATES, AND HOOD (840.03, Sheet 2 of 2)

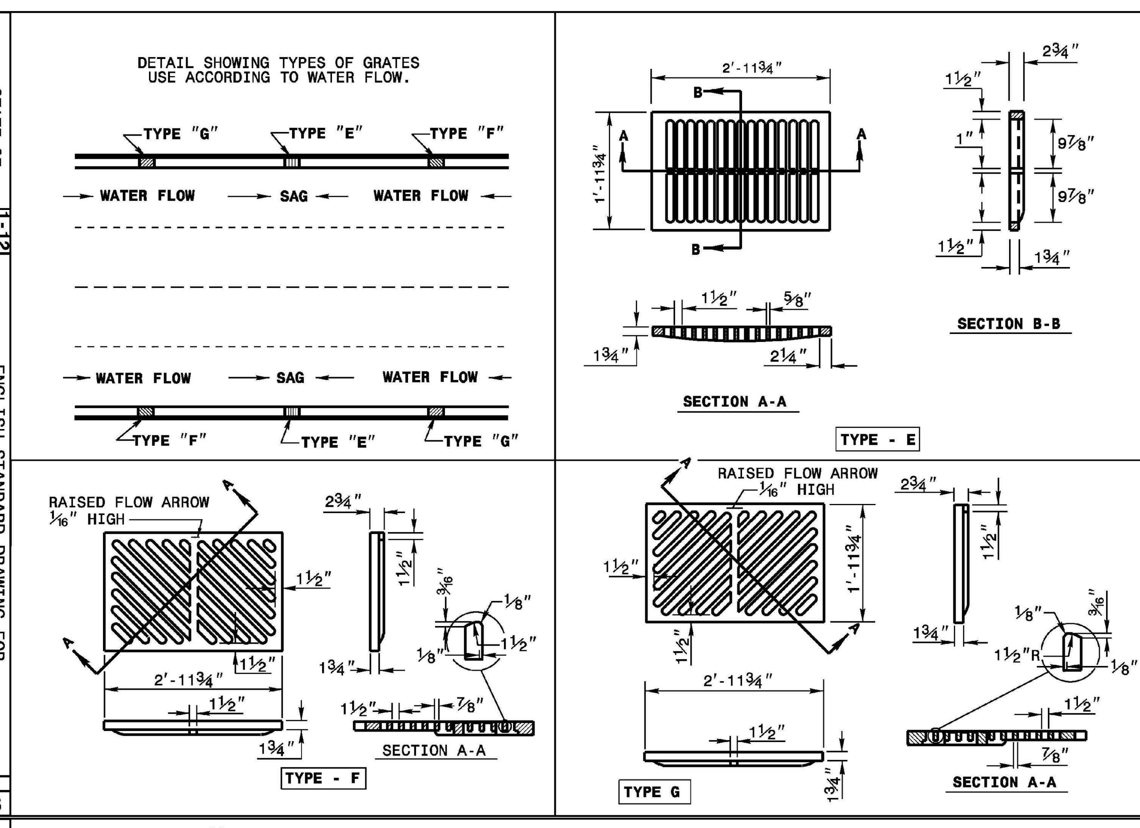

STATE OF NORTH CAROLINA DEPT. OF TRANSPORTATION DIVISION OF HIGHWAYS RALEIGH, N.C. 1-12
ENGLISH STANDARD DRAWING FOR **FRAME, GRATES, AND HOOD** FOR USE ON STANDARD CATCH BASIN
SHEET 2 OF 2 **840.03**

CONCRETE GRATED DROP INLET TYPE 'B' (840.18)

GENERAL NOTES:
USE CLASS "B" CONCRETE THROUGHOUT.
PROVIDE ALL GRATED DROP INLETS OVER 3'-6" IN DEPTH WITH STEPS 12" ON CENTER. USE STEPS WHICH COMPLY WITH STD. DRAWING 840.66.
OPTIONAL CONSTRUCTION - MONOLITHIC POUR, 2" KEYWAY, OR #4 BAR DOWELS AT 12" CENTERS AS DIRECTED BY THE ENGINEER.
USE FORMS FOR THE CONSTRUCTION OF THE BOTTOM SLAB.
IF REINFORCED CONCRETE PIPE IS SET IN BOTTOM SLAB OF BOX, ADD TO SLAB AS SHOWN ON STD. NO. 840.00.
CONSTRUCT WITH PIPE CROWNS MATCHING.
MAX. DEPTH OF THIS STRUCTURE FROM TOP OF BOTTOM SLAB TO TOP ELEVATION IS 12 FEET.
USE STANDARD FRAMES AND GRATES 840.22 (SHOWN), 840.24(SHOWN), 840.20, 840.29, AND 840.33.
SEE STANDARD DRAWING 840.25 FOR ATTACHMENT OF FRAMES AND GRATES NOT SHOWN.
CHAMFER ALL EXPOSED CORNERS 1".
DRAWING NOT TO SCALE.

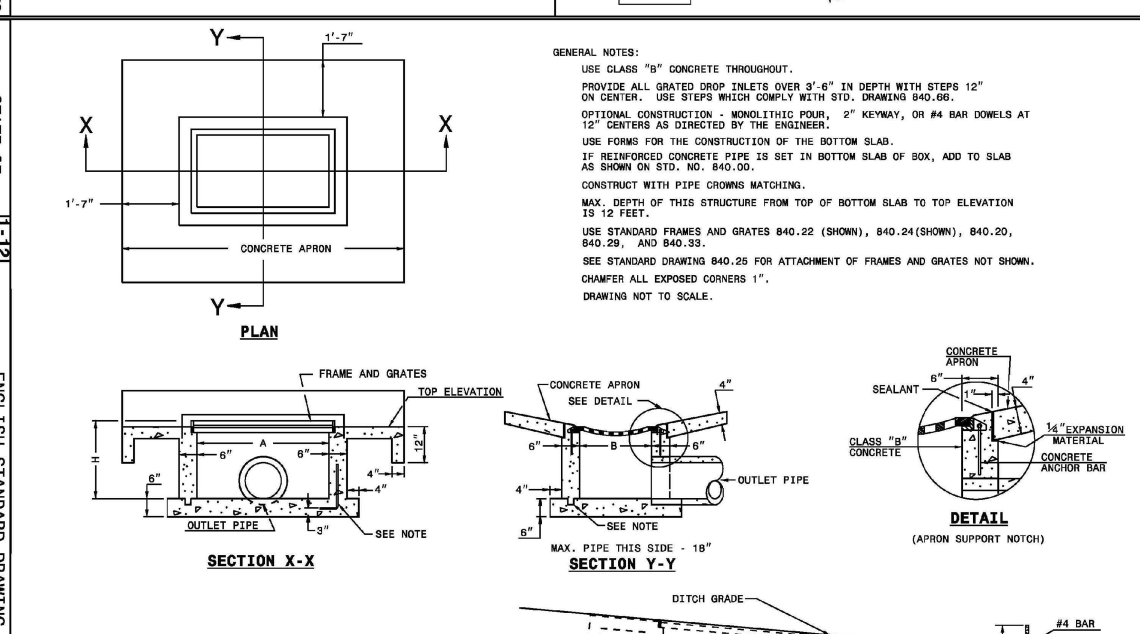

MINIMUM DIMENSIONS AND QUANTITIES FOR CONCRETE GRATED DROP INLET									
PIPE	SPAN	WIDTH	HEIGHT	CUBIC YARDS OF CONCRETE IN BOX				DEDUCTIONS FOR ONE PIPE	
D	A	B	H	BOTTOM SLAB	H PER FT. HT.	H MIN. TOTAL	TOTAL	C.S.	R.C.
12"	3'-8"	2'-0"	2'-6"	0.362	0.247	0.597	0.958	0.020	0.032
15"	3'-8"	2'-0"	2'-9"	0.362	0.247	0.659	1.021	0.023	0.036
18"	3'-8"	2'-0"	3'-0"	0.362	0.247	0.720	1.082	0.033	0.049
24"	3'-8"	2'-0"	3'-6"	0.362	0.247	0.865	1.227	0.059	0.085
30"	3'-8"	2'-0"	4'-0"	0.362	0.247	0.988	1.350	0.092	0.127
36"	3'-8"	2'-0"	4'-6"	0.362	0.247	1.112	1.474	0.132	0.178

STATE OF NORTH CAROLINA DEPT. OF TRANSPORTATION DIVISION OF HIGHWAYS RALEIGH, N.C. 1-12
ENGLISH STANDARD DRAWING FOR **CONCRETE GRATED DROP INLET TYPE 'B'** 12" THRU 36" PIPE
SHEET 1 OF 1 **840.18**

FRAMES AND WIDE SLOT SAG GRATES (840.22)

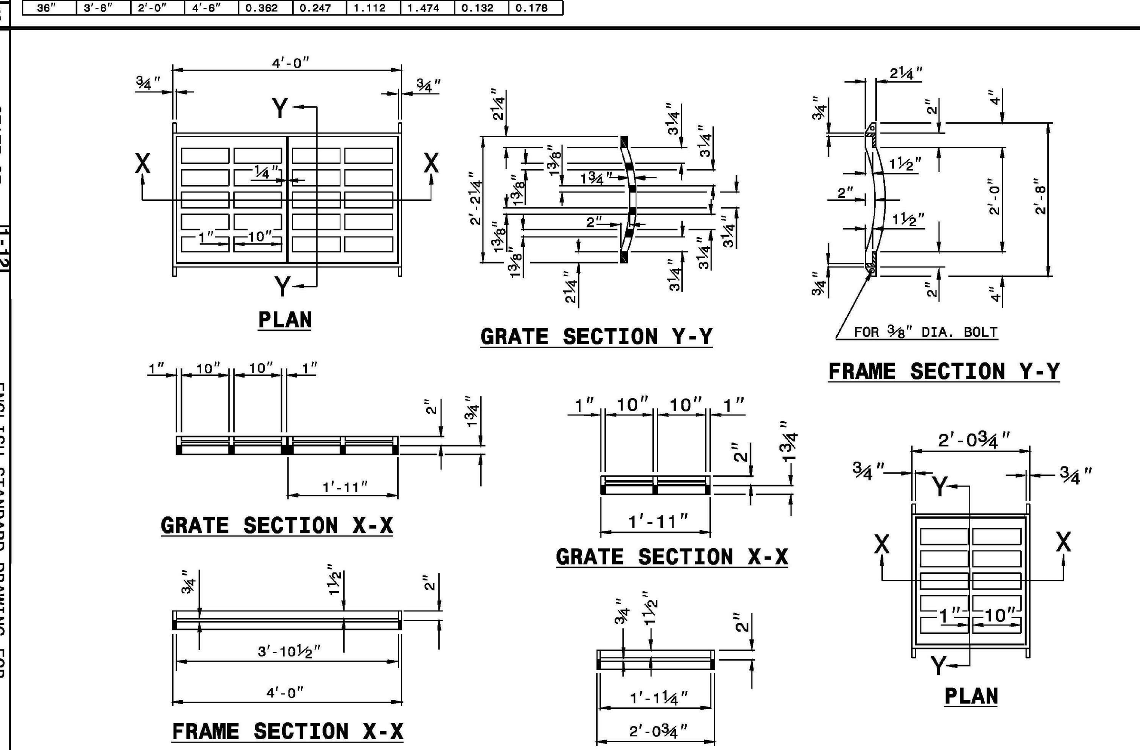

NOTE: SEE STD. DWG. 840.25 FOR FRAME ANCHORAGE.

STATE OF NORTH CAROLINA DEPT. OF TRANSPORTATION DIVISION OF HIGHWAYS RALEIGH, N.C. 1-12
ENGLISH STANDARD DRAWING FOR **FRAMES AND WIDE SLOT SAG GRATES**
SHEET 1 OF 1 **840.22**

ANCHORAGE FOR FRAMES (840.25)

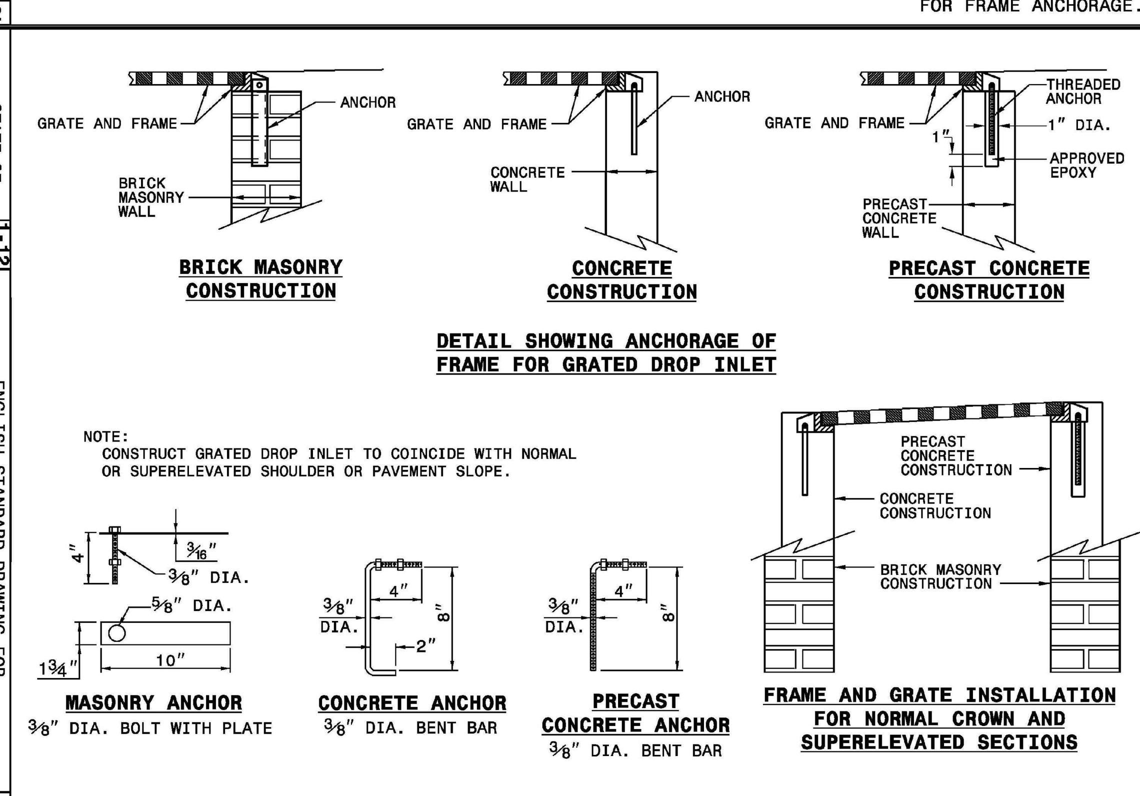

NOTE: CONSTRUCT GRATED DROP INLET TO COINCIDE WITH NORMAL OR SUPERELEVATED SHOULDER OR PAVEMENT SLOPE.

STATE OF NORTH CAROLINA DEPT. OF TRANSPORTATION DIVISION OF HIGHWAYS RALEIGH, N.C. 1-12
ENGLISH STANDARD DRAWING FOR **ANCHORAGE FOR FRAMES** BRICK/CONCRETE/PRECAST CONCRETE
SHEET 1 OF 1 **840.25**

CONCRETE CURB, GUTTER AND CURB & GUTTER (846.01)

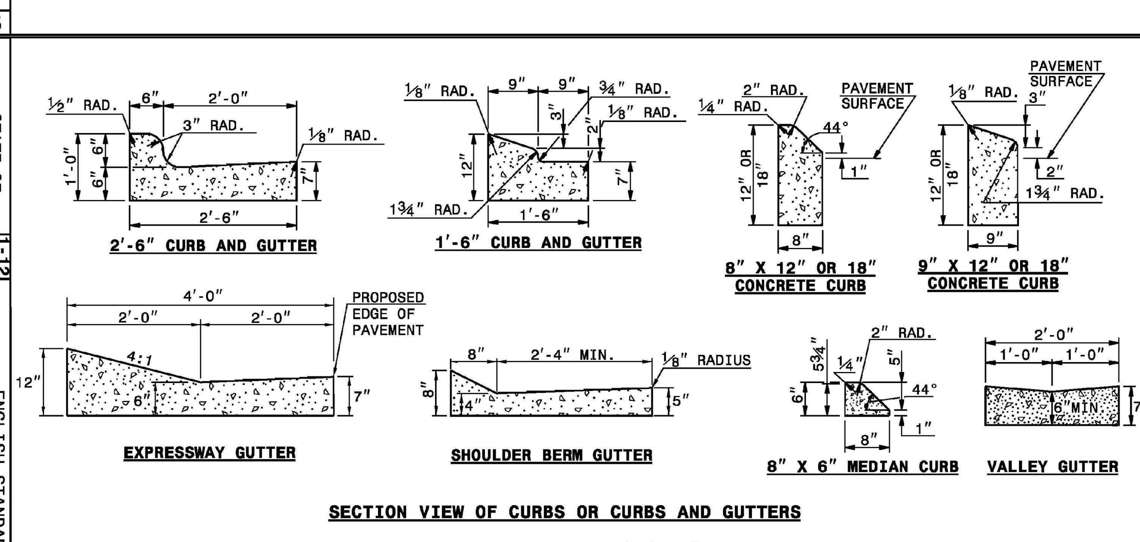

GENERAL NOTES:
-PLACE CONTRACTION JOINTS AT 10' INTERVALS, EXCEPT THAT A 15' SPACING MAY BE USED WHEN A MACHINE IS USED OR WHEN SATISFACTORY SUPPORT FOR THE FACE FORM CAN BE OBTAINED WITHOUT THE USE OF TEMPLATES AT 10' INTERVALS.
-JOINT SPACING MAY BE ALTERED IF REQUIRED BY THE ENGINEER.
-CONTRACTION JOINTS MAY BE INSTALLED WITH THE USE OF TEMPLATES OR FORMED BY OTHER APPROVED METHODS.
CONSTRUCT NON-TEMPLATE FORMED JOINTS A MIN. OF 1½" DEEP.
-FILL ALL CONSTRUCTION JOINTS, EXCEPT IN 8"x6" MEDIAN CURB, WITH JOINT FILLER AND SEALER.
-SPACE EXPANSION JOINTS AT 90' INTERVALS AND ADJACENT TO ALL RIGID OBJECTS.

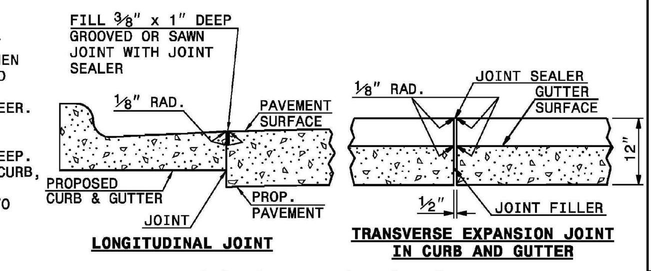

STATE OF NORTH CAROLINA DEPT. OF TRANSPORTATION DIVISION OF HIGHWAYS RALEIGH, N.C. 1-12
ENGLISH STANDARD DRAWING FOR **CONCRETE CURB, GUTTER AND CURB & GUTTER**
SHEET 1 OF 3 **846.01**

APPROVED FOR CONSTRUCTION

TOWN OF PITTSBORO

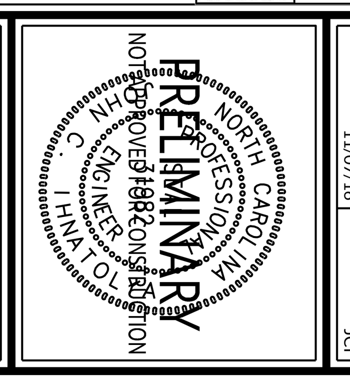

WithersRavenel
Engineers | Planners | Surveyors
115 MacKenan Drive | Cary, NC 27511 | t: 919.469.3340 | license #: C-0832 | www.withersravenel.com

CHATHAM PARK SECTION 5.1
PITTSBORO, CHATHAM COUNTY, NORTH CAROLINA

STORM DRAINAGE DETAILS

Job No. 02150098.12	Drawn By JCI
Date 11/07/16	Designer JCI

PRELIMINARY
NOT APPROVED FOR CONSTRUCTION

Revisions

Sheet No. 10.4