Section 2722

Engineered Surface Drainage Products

GENERAL
PVC surface drainage inlets shall be of the inline drain type as indicated on the contract drawing and referenced within the contract specifications. The ductile iron grates for each of these fittings are to be considered an integral part of the surface drainage inlet and shall be furnished by the same manufacturer. The surface drainage inlets shall be as manufactured by Nyloplast a division of Advanced Drainage Systems, Inc., or prior approved equal.

MATERIALS
The inline drain required for this contract shall be manufactured from PVC pipe stock, utilizing a thermo-molding process to reform the pipe stock to the furnished configuration. The drainage pipe connection stubs shall be manufactured from PVC pipe stock and formed to provide a watertight connection with the specified pipe system. This joint tightness shall conform to ASTM D3212 for joints for drain and sewer plastic pipe using flexible elastomeric seals. The flexible elastomeric seals shall conform to ASTM F477. The pipe bell spigot shall be joined to the inline drain body by use of a **swage mechanical joint**. The raw material used to manufacture the pipe stock that is used to manufacture the inline drain body and pipe stubs of the surface drainage inlets shall conform to ASTM D1784 cell class 12454.

The grates furnished for all surface drainage inlets shall be ductile iron grates for sizes 8", 10", 12", 15", 18", 24" and 30" shall be made specifically for each fitting so as to provide a round bottom flange that closely matches the diameter of the surface drainage inlet. Grates for inline drains shall be capable of supporting H-20 wheel loading for traffic areas or H-10 loading for pedestrian areas. 12" and 15" square grates will be hinged to the frame using pins. Metal used in the manufacture of the castings shall conform to ASTM A536 grade 70-50-05 for ductile iron. Grates shall be provided painted black.

INSTALLATION
The specified PVC surface drainage inlet shall be installed using conventional flexible pipe backfill materials and procedures. The backfill material shall be crushed stone or other granular material meeting the requirements of class 1 or class 2 material as defined in ASTM D2321. Bedding and backfill for surface drainage inlets shall be well placed and compacted uniformly in accordance with ASTM D2321. The drain basin body will be cut at the time of the final grade. No brick, stone or concrete block will be required to set the grate to the final grade height. For H-20 load rated installations, a concrete ring will be poured under and around the grate and frame. The concrete slab must be designed taking into consideration local soil conditions, traffic loading, and other applicable design factors. For other installation considerations such as migration of fines, ground water, and soft foundations refer to ASTM D2321 guidelines.

THIS PRINT DISCLOSES SUBJECT MATTER IN WHICH NYLOPLAST HAS PROPRIETARY RIGHTS. THE RECEIPT OR POSSESSION OF THIS PRINT DOES NOT CONFER, TRANSFER, OR LICENSE THE USE OF THE DESIGN OR TECHNICAL INFORMATION SHOWN HEREIN REPRODUCTION OF THIS PRINT OR ANY INFORMATION CONTAINED HEREIN, OR MANUFACTURE OF ANY ARTICLE HEREFROM, FOR THE DISCLOSURE TO OTHERS IS FORBIDDEN, EXCEPT BY SPECIFIC WRITTEN PERMISSION FROM NYLOPLAST. ©2013 NYLOPLAST

DRAWN BY CJA	MATERIAL		Nyloplast 3130 VERONA AVE BUFORD, GA 30518 PHN (770) 932-2443 FAX (770) 932-2490 www.nyloplast-us.com
DATE 03-10-00			
REVISED BY CCA	PROJECT NO./NAME		TITLE 8 IN - 30 IN INLINE DRAIN SPECIFICATIONS
DATE 09-09-13			
DWG SIZE A	SCALE 1:1	SHEET 1 OF 1	DWG NO. 7003-110-009 REV G

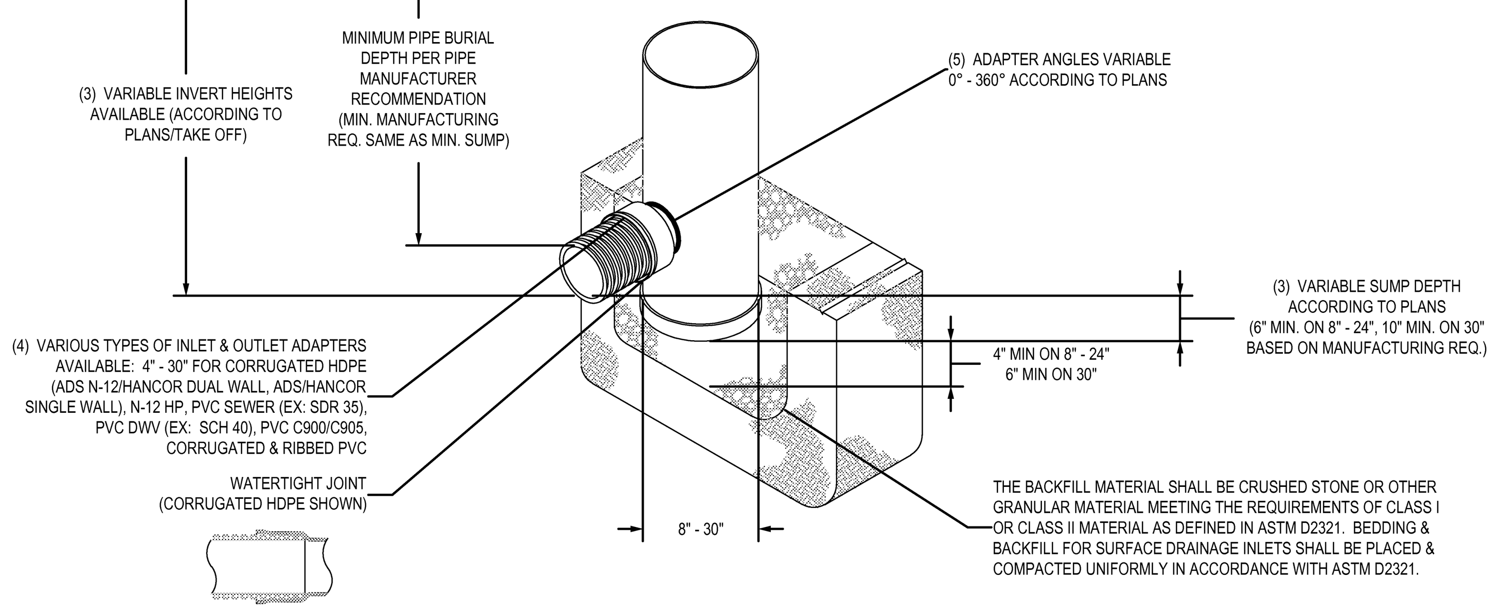

1 - 8" - 30" DOME GRATES SHALL BE DUCTILE IRON PER ASTM A536 GRADE 70-50-05.
2 - 8" & 10" DOME GRATES FIT ONTO THE DRAIN BASINS WITH THE USE OF A PVC BODY TOP. SEE DRAWING NO. 7001-110-045.
3 - DRAIN BASIN TO BE CUSTOM MANUFACTURED ACCORDING TO PLAN DETAILS. RISERS ARE NEEDED FOR BASINS OVER 84" DUE TO SHIPPING RESTRICTIONS. SEE DRAWING NO. 7001-110-065.
4 - DRAINAGE CONNECTION STUB JOINT TIGHTNESS SHALL CONFORM TO ASTM D3212 FOR CORRUGATED HDPE (ADS N-12/HANCOR DUAL WALL), N-12 HP, & PVC SEWER (4" - 24").
5 - ADAPTERS CAN BE MOUNTED ON ANY ANGLE 0° TO 360°. TO DETERMINE MINIMUM ANGLE BETWEEN ADAPTERS SEE DRAWING NO. 7001-110-012.
6 - 8" - 30" DOME GRATES HAVE NO LOAD RATING.

THIS PRINT DISCLOSES SUBJECT MATTER IN WHICH NYLOPLAST HAS PROPRIETARY RIGHTS. THE RECEIPT OR POSSESSION OF THIS PRINT DOES NOT CONFER, TRANSFER, OR LICENSE THE USE OF THE DESIGN OR TECHNICAL INFORMATION SHOWN HEREIN REPRODUCTION OF THIS PRINT OR ANY INFORMATION CONTAINED HEREIN, OR MANUFACTURE OF ANY ARTICLE HEREFROM, FOR THE DISCLOSURE TO OTHERS IS FORBIDDEN, EXCEPT BY SPECIFIC WRITTEN PERMISSION FROM NYLOPLAST. ©2013 NYLOPLAST

DRAWN BY EBC	MATERIAL		Nyloplast 3130 VERONA AVE BUFORD, GA 30518 PHN (770) 932-2443 FAX (770) 932-2490 www.nyloplast-us.com
DATE 03-25-10			
REVISED BY CCA	PROJECT NO./NAME		TITLE DRAIN BASIN WITH DOME GRATE QUICK SPEC INSTALLATION DETAIL
DATE 09-05-13			
DWG SIZE A	SCALE 1:40	SHEET 1 OF 1	DWG NO. 7001-110-397 REV C

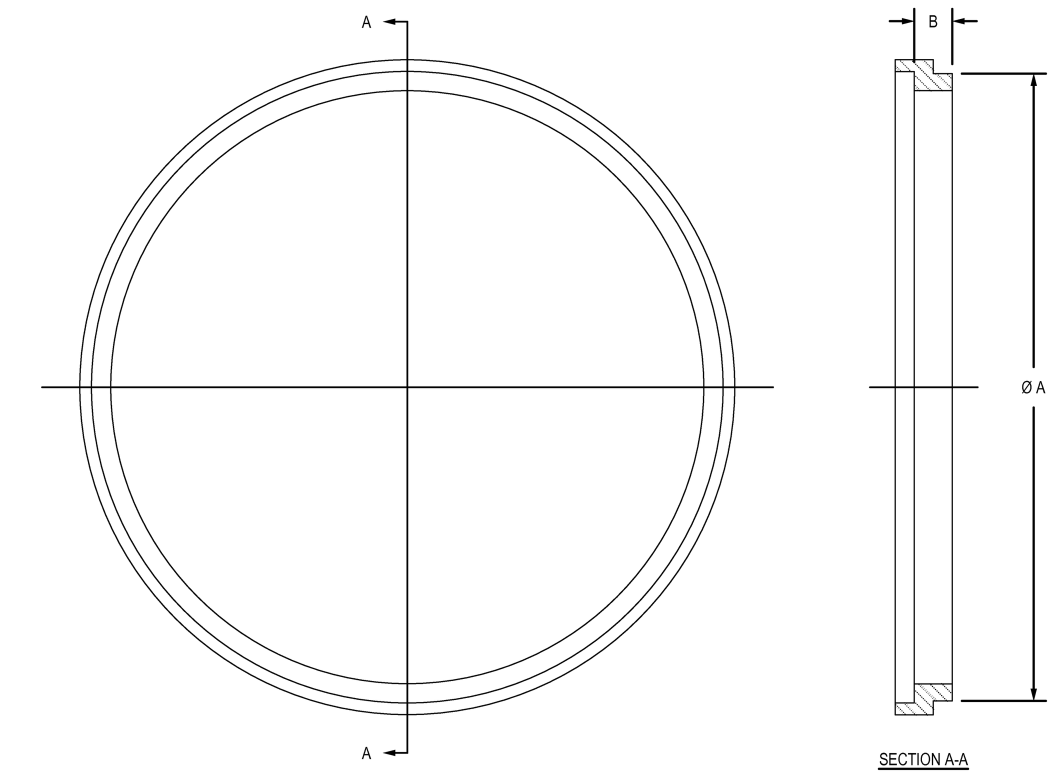

FRAME SIZE	PART NUMBER	ØA	B
18"	1899CGER150	18.64	1.50
	1899CGER200	18.64	2.00
24"	2499CGER150	24.75	1.50
	2499CGER200	24.75	2.00
30"	3099CGER150	31.88	1.50
	3099CGER200	31.88	2.00

QUALITY: MATERIALS SHALL CONFORM TO ASTM A536 GRADE 70-50-05
PAINT: CASTINGS ARE FURNISHED WITH A BLACK PAINT
DIMENSIONS ARE FOR REFERENCE ONLY
ACTUAL DIMENSIONS MAY VARY
DIMENSIONS ARE IN INCHES

THIS PRINT DISCLOSES SUBJECT MATTER IN WHICH NYLOPLAST HAS PROPRIETARY RIGHTS. THE RECEIPT OR POSSESSION OF THIS PRINT DOES NOT CONFER, TRANSFER, OR LICENSE THE USE OF THE DESIGN OR TECHNICAL INFORMATION SHOWN HEREIN REPRODUCTION OF THIS PRINT OR ANY INFORMATION CONTAINED HEREIN, OR MANUFACTURE OF ANY ARTICLE HEREFROM, FOR THE DISCLOSURE TO OTHERS IS FORBIDDEN, EXCEPT BY SPECIFIC WRITTEN PERMISSION FROM NYLOPLAST. ©2010 NYLOPLAST

DRAWN BY JJC	MATERIAL DUCTILE IRON		Nyloplast 3130 VERONA AVE BUFORD, GA 30518 PHN (770) 932-2443 FAX (770) 932-2490 www.nyloplast-us.com
DATE 8-1-08			
REVISED BY EBC	PROJECT NO./NAME		TITLE 18 IN - 30 IN ROUND GRATE/COVER EXTENSION RING DETAIL
DATE 3-15-10			
DWG SIZE A	SCALE 1:6	SHEET 1 OF 1	DWG NO. 7001-110-323 REV B

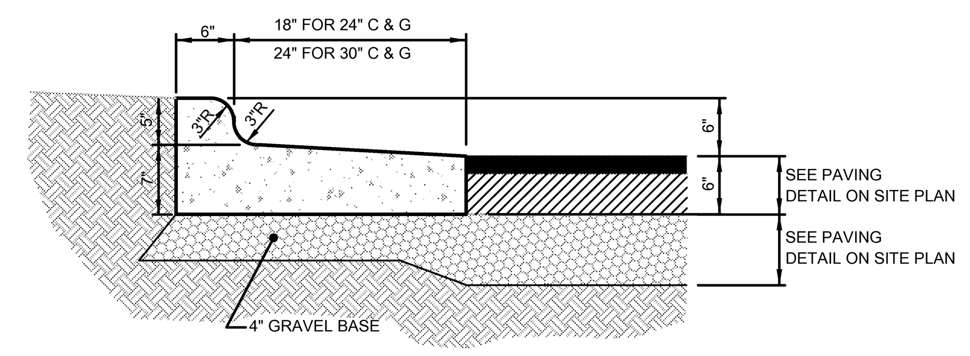

1) CONCRETE SHALL BE 3000 PSI.
2) CONTRACTION JOINTS SHALL BE SPACED AT 10 INTERVALS . MAINTAIN 50 MAXIMUM BETWEEN EXPANSION JOINTS AND BETWEEN RIGID OBJECTS.

24" & 30" SPILL CURB DETAIL @ ASPHALT PAVING

NTS

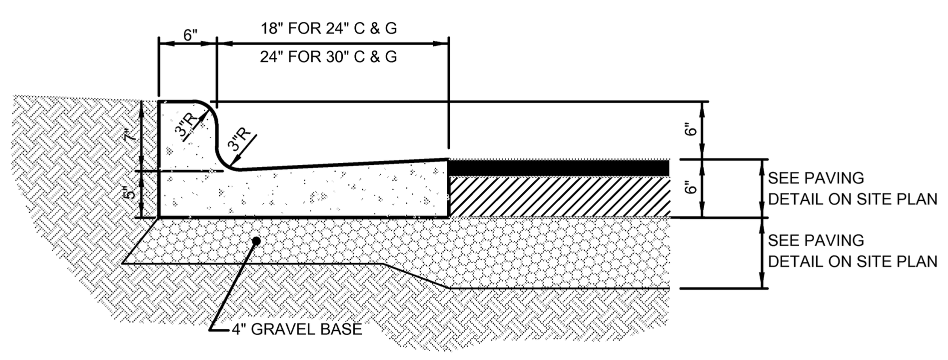

1) CONCRETE SHALL BE 3000 PSI.
2) CONTRACTION JOINTS SHALL BE SPACED AT 10 INTERVALS . MAINTAIN 50 MAXIMUM BETWEEN EXPANSION JOINTS AND BETWEEN RIGID OBJECTS.

(STANDARD) 24" & 30" CURB & GUTTER DETAIL @ ASPHALT PAVING

NTS

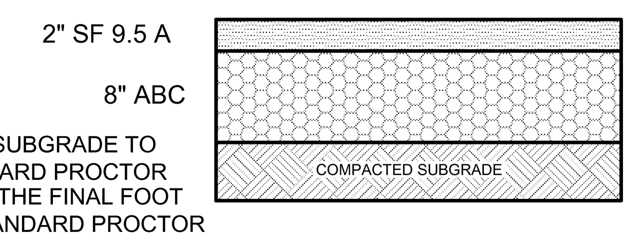

COMPACT SUBGRADE TO 95% STANDARD PROCTOR EXCEPT IN THE FINAL FOOT TO 98% STANDARD PROCTOR

TYPICAL PARKING STALL PAVEMENT SECTION

NTS

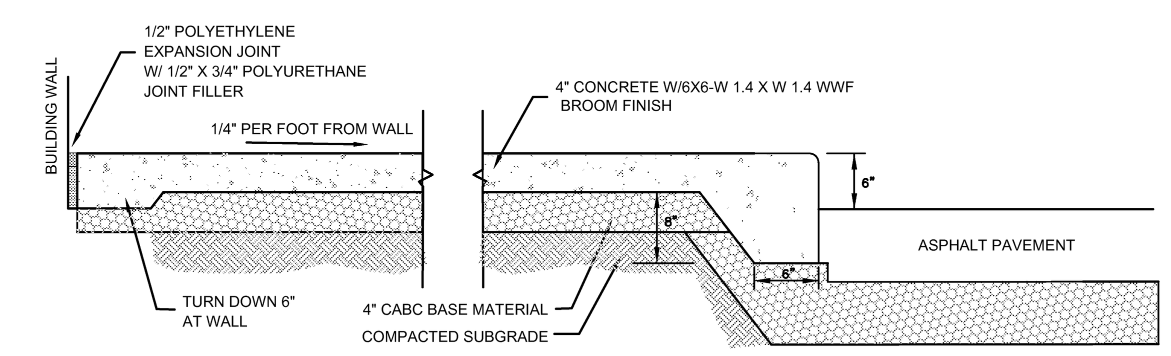

STANDARD SIDEWALK TURNDOWN DETAIL

NTS

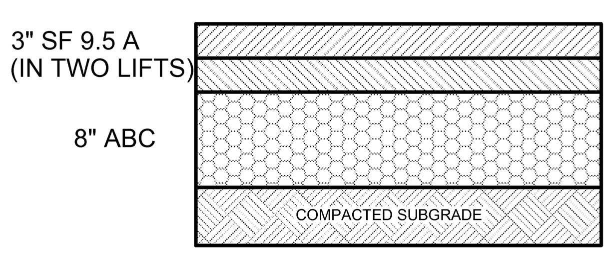

COMPACT SUBGRADE TO 95% STANDARD PROCTOR EXCEPT IN THE FINAL FOOT TO 98% STANDARD PROCTOR

TYPICAL DRIVEWAY/ROAD PAVEMENT SECTION

NTS

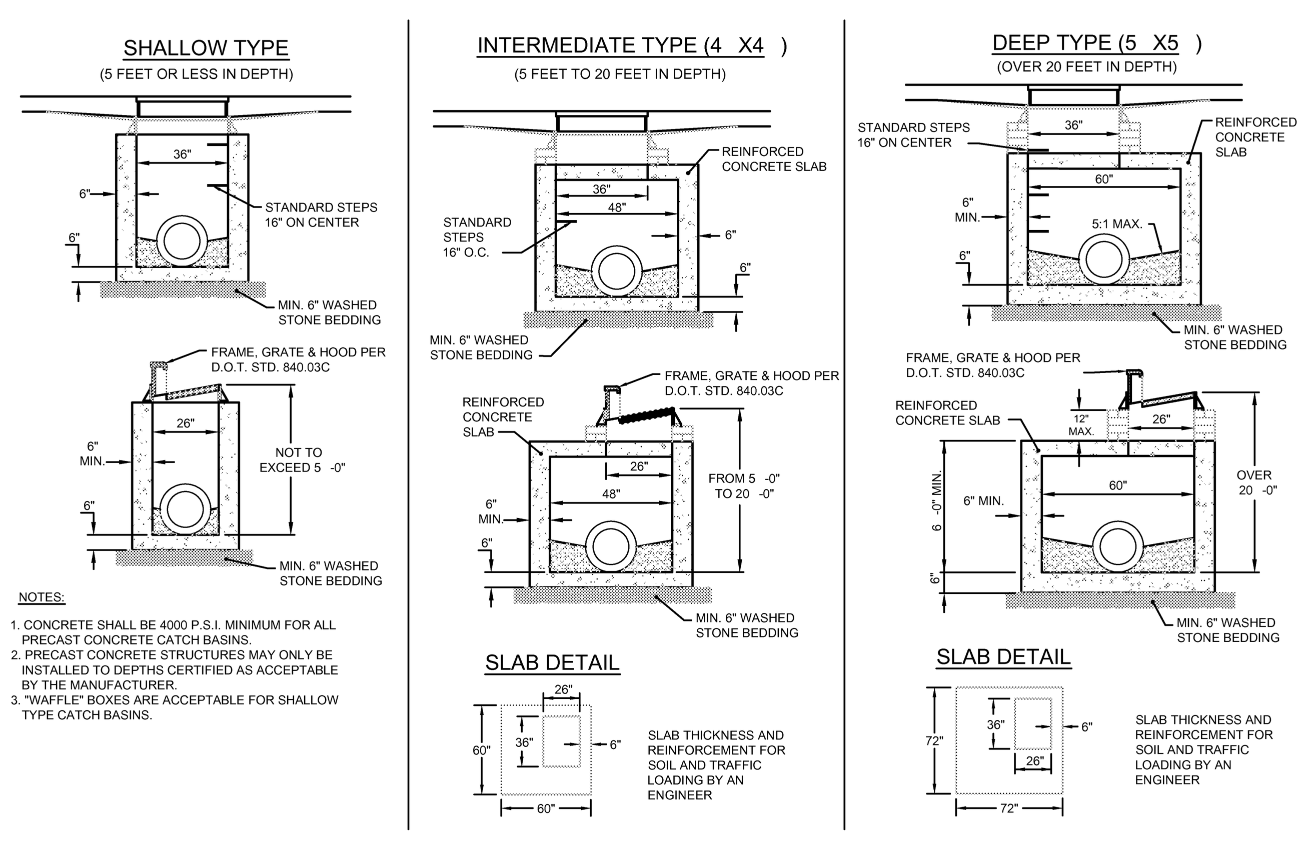

STANDARD PRECAST CONCRETE CATCH-BASIN

NTS

FINAL DESIGN
NOT RELEASED
FOR CONSTRUCTION

STOP!
BEFORE YOU DIG CALL
THE NC ONE CALL CENTER
1-800-632-4949
IT'S THE LAW!

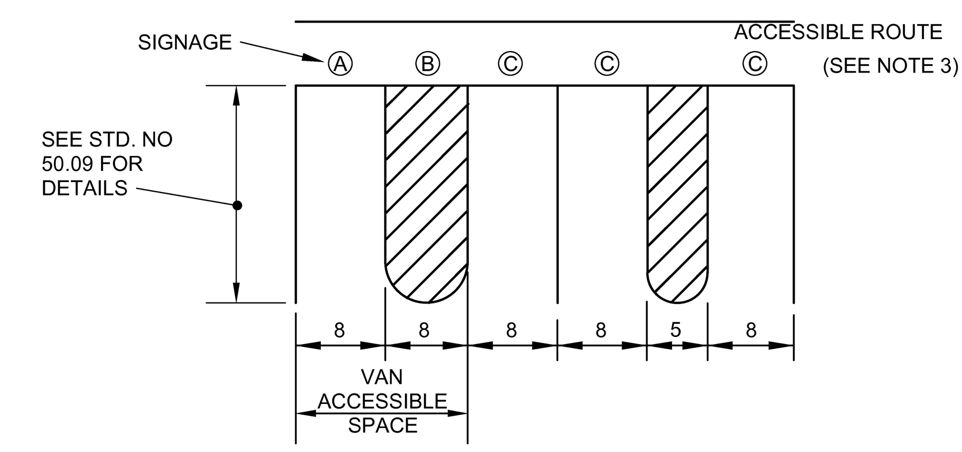

ONE OUT OF EVERY EIGHT (8)ACCESSIBLE SPACES, BUT NOT LESS THAN ONE, IS REQUIRED TO BE VAN ACCESSIBLE.

PARKING SPACE PAVEMENT MARKINGS

Ⓐ

MUTCD R7-8 12"x18"

R7-8a 12"x6"

R7-8D 12"x9"

SEE STANDARD NO. 50.10B & 50.10C FOR SUPPLEMENTAL SIGN DETAIL

Ⓑ

MUTCD R7-1 12"x18"

REQUIRED ACCESSIBLE RESERVED PARKING SIGN

Ⓒ

MUTCD R7-8 12"x18"

R7-8D 12"x9"

SEE STANDARD NO. 50.10C FOR SUPPLEMETAL SIGN DETAIL

ACCESSIBLE PARKING REQUIREMENTS

TOTAL PARKING SPACES PROVIDED	MINIMUM NUMBER OF ACCESSIBLE SPACES SPACES REQUIRED	MINIMUM NUMBER OF ACCESSIBLE SPACES REQUIRED TO BE VAN ACCESSIBLE
1 TO 25	1	1
26 TO 50	2	1
51 TO 75	3	1
76 TO 100	4	1
101 TO 150	5	1
151 TO 200	6	1
201 TO 300	7	1
301 TO 400	8	1
401 TO 500	9	2
501 TO 1000	2% OF TOTAL	1 IN EVERY 8 ACCESSIBLE SPACES
1001 AND OVER	20 PLUS 1 FOR EACH 100 OVER 1000	1 IN EVERY 8 ACCESSIBLE SPACES
SECTION 4.1.2 (5) OF THE AMERICANS WITH DISABILITIES ACT (ADA). SEE 4.1,2,(5) (d) FOR MEDICAL CARE FACILITIES		

NOTES:

1. ALL 12"x18" ACCESSIBLE SIGNS (R7-8 & R7-1) SHALL BE MOUNTED AT 7 FEET FROM GRADE TO BOTTOM EDGE OF SIGN FACE (MUTCD). MOUNTING HEIGHT CAN BE REDUCED TO 5 FEET IF PLACED IN AN AREA BETWEEN SIDEWALK AND BUILDING FACE IN WHICH PEDESTRIANS ARE NOT EXPECTED TO USE.
2. REFER TO MANUAL ON UNIFORM TRAFFIC CONTROL DEVICES, (MUTCD) U.S. DEPARTMENT OF TRANSPORTATION AND NORTH CAROLINA DEPARTMENT OF TRANSPORTATION SUPPLEMENT.
3. IF ACCESSIBLE ROUTE IS A RAISED SIDEWALK AREA, THEN RAMPS ARE REQUIRED AT LOADING ZONE AREA.

ACCESSIBLE PARKING AND SIGNAGE DETAIL

NTS

NO.	REVISIONS	DATE
1.	REVISED PER TOWN COMMENTS.	10/28/15

CE GROUP
301 GLENWOOD AVE. 220
RALEIGH,NC 27603
PHONE: 919-367-8790
FAX: 919-322-0032
www.cegroupinc.com
License # C-1739

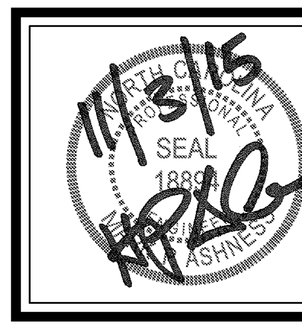

SITE DEVELOPMENT PLANS FOR WEST STREET OFFICE BUILDING
SITE DETAILS
CHATHAM COUNTY, NC

Date: October 2015
Scale: -
Drawn: CPM
Checked: MPA
Project No. 127-190
Computer Dwg. Name 127-190_Sht-06-07-SiteDetails

Sheet No: 7 Of -