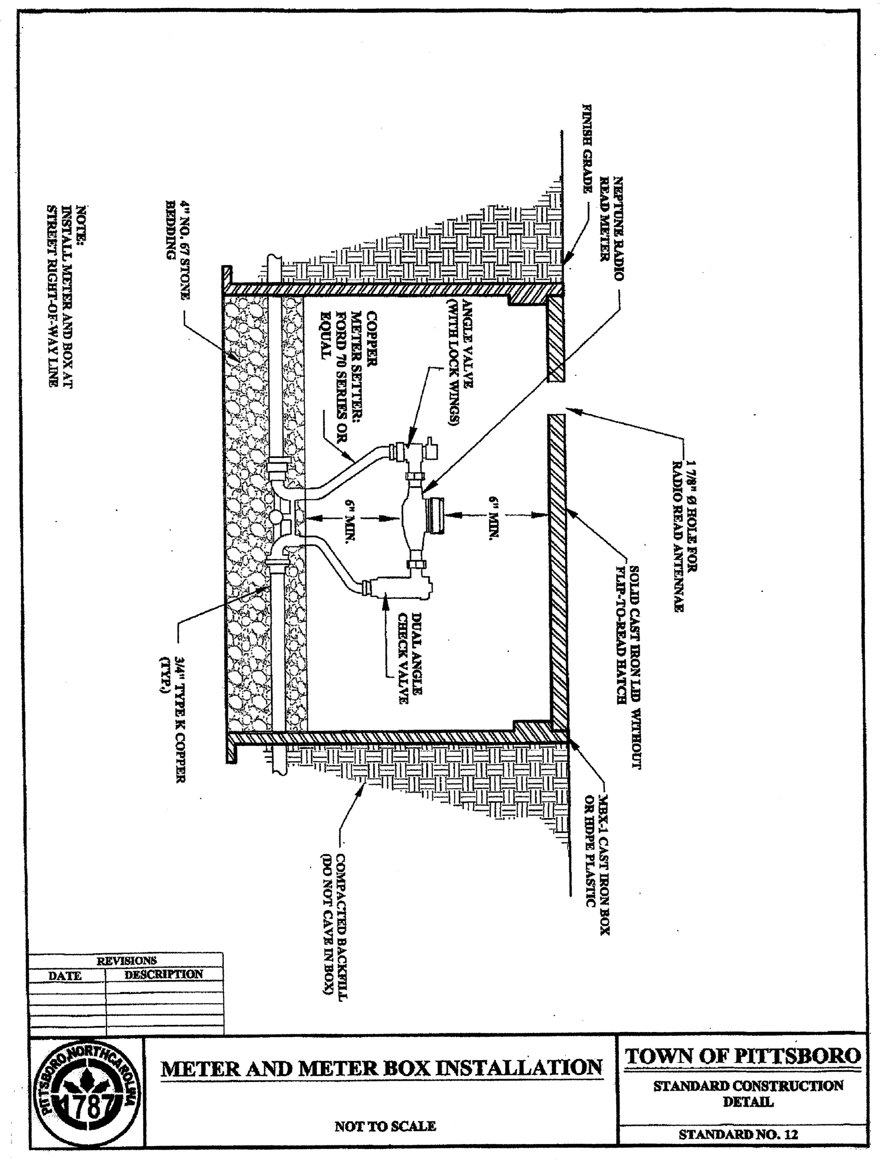


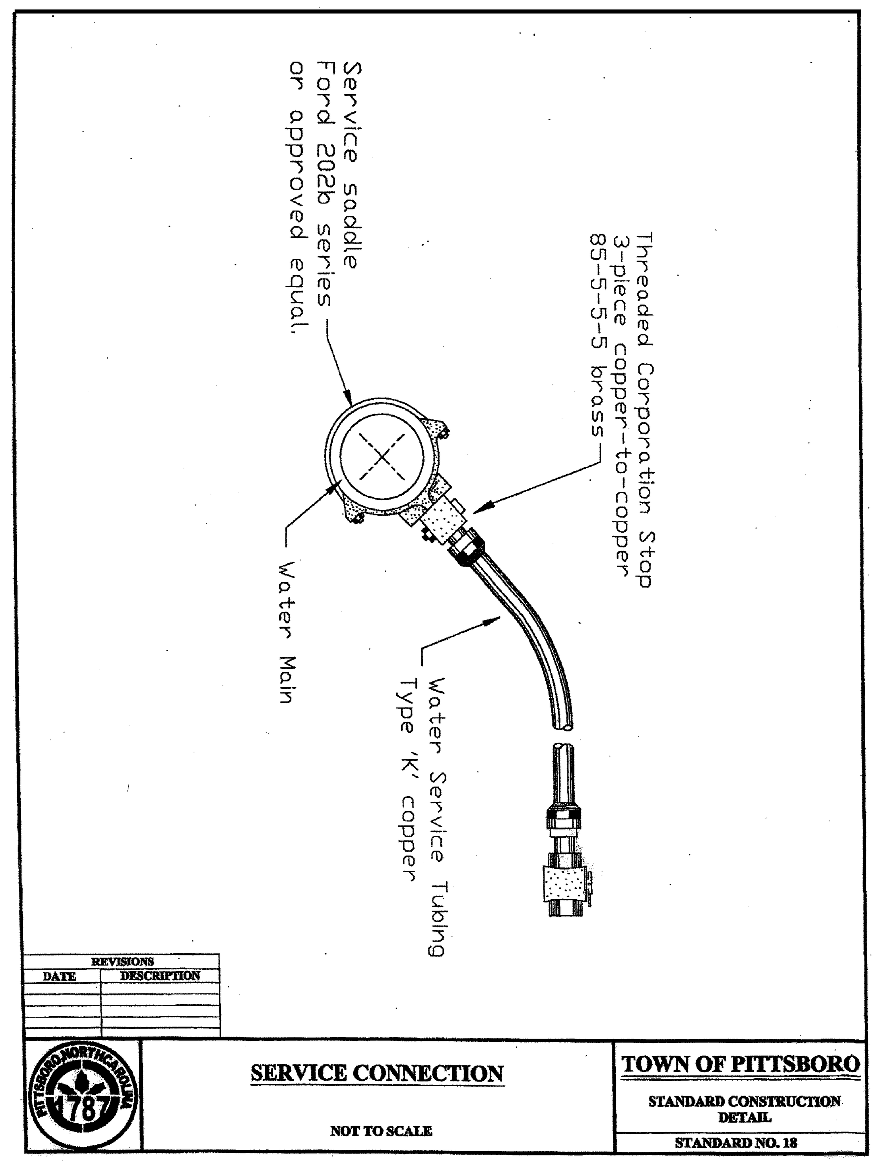


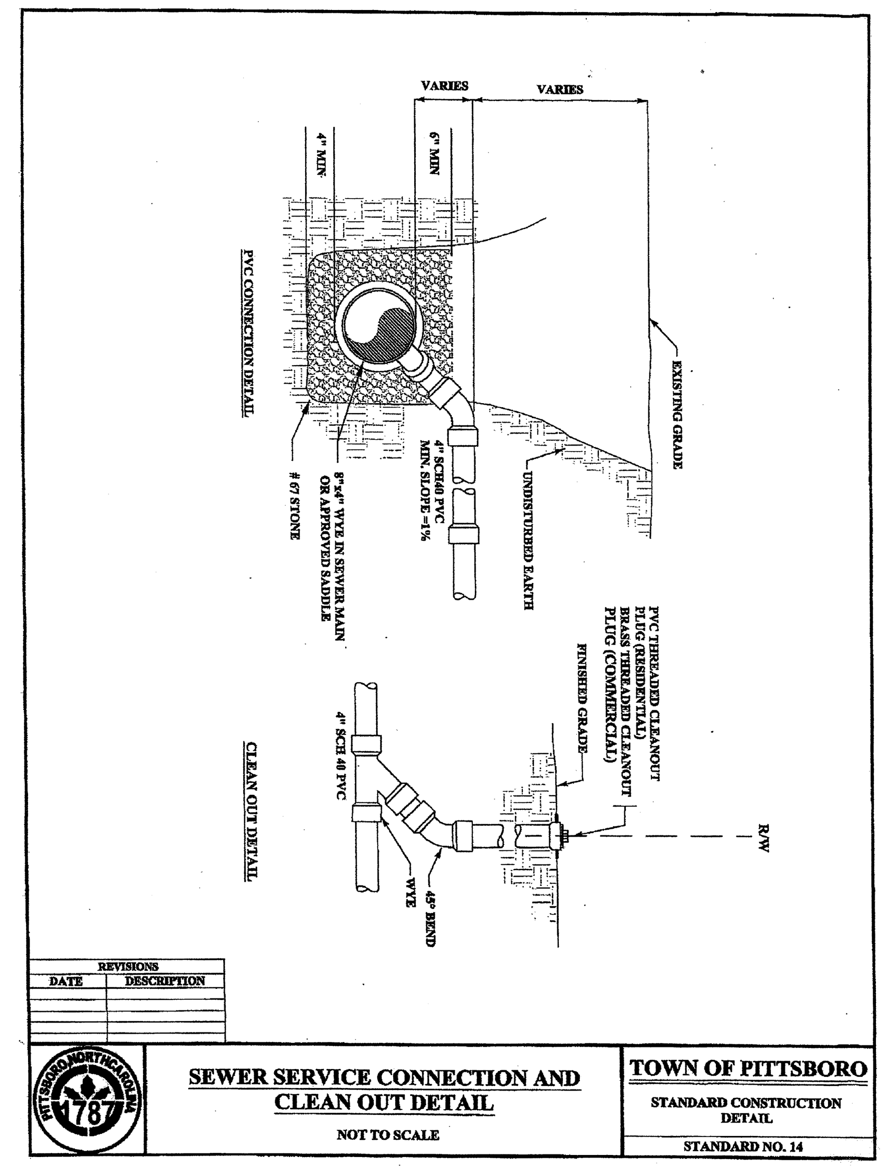


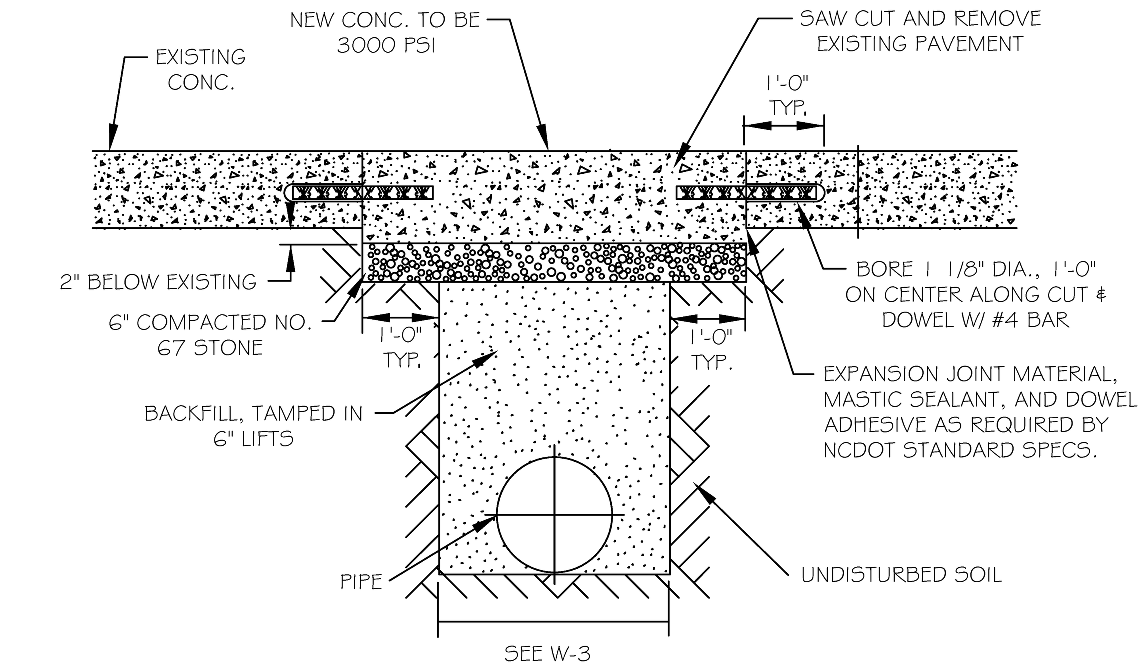


NOTES:
1. SEE CITY OF RALEIGH STANDARDS FOR TRENCHES AND PIPE BEDDING W-3 FOR ADDITIONAL DETAILS
2. PAVEMENT CUTS WITHIN NCDOT ROW SHALL CONFORM TO THE APPROVED ON SITE ENCROACHMENT PERMIT.
3. THE PAVEMENT CUT SHALL BE DEFINED BY A STRAIGHT EDGE AND CUT WITH AN APPROVED SAW CUT MACHINE.
4. THE TRENCH SUBGRADE MATERIAL SHALL BE BACKFILLED WITH SUITABLE MATERIAL AND COMPACTED TO A DENSITY OF AT LEAST 95% OF THAT OBTAINED BY COMPACTING A SAMPLE OF THE MATERIAL IN ACCORDANCE WITH AASHTO T-99 AS MODIFIED BY NCDOT. 5. THE FINAL 6" OF FILL SHALL CONSIST OF ABC MATERAIL COMPACTED TO A DENSITY EQUAL TO 100% OF THAT OBTAINED BY COMPACTING A SAMPLE OF THE MATERIAL IN ACCORDANCE WITH AASHTO T-80 AS MODIFIED BY NCDOT .

## STANDARD CONCRETE PAVEMENT PATCH DETAIL

NTS

FINAL DESIGN
NOT RELEASED
FOR CONSTRUCTION

STOP!
BEFORE YOU DIG CALL
THE NC ONE CALL CENTER
1-800-632-4949
IT'S THE LAW!

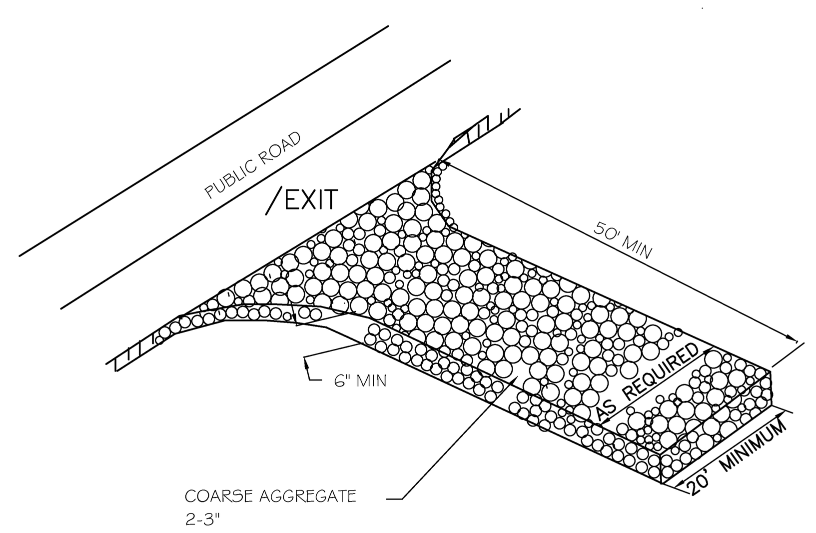


NOTES:

a. GRAVEL PAD TO BE 20 x 50 AND 6" THICK MINIMUM
b. TURNING RADIUS SUFFICIENT TO ACCOMMODATE LARGE TRUCKS IS TO BE PROVIDED.
c. ENTRANCE(S) SHOULD BE LOCATED TO PROVIDE FOR MAXIMUM UTILITY BY ALL CONSTRUCTION VEHICLES.
d. MUST BE MAINTAINED IN A CONDITION WHICH WILL PREVENT TRACKING OR DIRECT FLOW OF MUD ONTO STREETS. PERIODIC TOPDRESSING WITH STONE SILL BE NECESSARY; KEEP SOME HANDY.
e. ANY MATERIAL WHICH STILL MAKES IT ONTO THE ROAD MUST BE CLEANED UP IMMEDIATELY.

NOTES: APPLICABLE AT ALL POINTS OF INGRESS & EGRESS UNTIL SITE IS STABILIZED, FREQUENT CHECKS OF THE DEVICE AND TIMELY MAINTENANCE MUST BE PROVIDED.

## TEMPOROARY CONSTRUCTION ENTRANCE

NTS

EROSION CONTROL NOTES

1. ALL CONSTRUCTION SHALL BE IN ACCORDANCE WITH STATE AND CHATHAM COUNTY REQUIREMENTS.
2. SUFFICIENT EROSION CONTROL PRACTICES MUST BE INSTALLED AND MAINTAINED TO RETAIN SEDIMENT WITHIN THE BOUNDARIES OF THE SITE. ALL DISTURBED ARES SHALL BE NONEROSIVE AND STABLE WITHIN SEVEN (7) WORKING DAYS OR FOURTEEN (14) CALENDAR DAYS AFTER COMPLETION OF THE ACTIVITY, WHICHEVER IS SHORTER.
3. MAINTENANCE: ALL EROSION AND SEDIMENT CONTROL PRACTICES TO BE INSPECTED WEEKLY AND AFTER EVERY RUNOFF PRODUCING RAINFALL EVENT. NEEDED REPAIRS WILL BE MADE IMMEDIATELY.
4. MAXIMUM GRADED SLOPE SHALL NOT EXCEED THREE (3) TO ONE (1).
5. SEE APPROVED GRADING, DRAINAGE, AND EROSION CONTROL PLANS FOR COUNTY LINE SITE, DATED FEBRUARY, 2008 FOR ADDITIONAL INFORMATION AND DETAILS.
6. SEE SHEET 8 FOR EROSION CONTROL DETAILS.
7. THIS SITE NOT IS LOCATED WITHIN A 100 YEAR FLOOD PLAIN ACCORDING TO FEMA MAP NUMBER 3710974100J, PANEL # 9741J EFFECTIVE DATE FEBUARY 2, 2007.

GROUND STABILIZATION *

| SITE AREA DESCRIPTION | STABILIZATION TIME FRAME | STABILIZATION TIME FRAME EXCEPTIONS |
|---|---|---|
| Perimeter dikes, swales, ditches and slopes | 7 days | None |
| High Quality Water (HQW) Zones | 7 days | None |
| Slopes steeper than 3:1 | 7 days | If slopes are 10 or less in length and are not steeper than 2:1, 14 days allowed |
| Slopes 3:1 or flatter | 14 days | 7-days for slopes greater than 50-feet in length |
| All other areas with slopes flatter than 4:1 | 14 days | None (except for perimeters and HQW Zones) |

* "Extensions of time may be approved by the permitting authority based on weather or other site-specific conditions that make compliance impracticable." (Section II.B (2)(b)

### *CONSTRUCTION NOTES*

ALL CONSTRUCTION SHALL BE IN ACCORDANCE WITH STATE AND LOCAL REQUIREMENTS.

SUFFICIENT EROSION CONTROL PRACTICES MUST BE INSTALLED AND MAINTAINED TO RETAIN SEDIMENT WITHIN THE BOUNDARIES OF THE SITE. GROUND COVER STABILIZATION SHALL BE IN ACCORDANCE WITH NPDES PERMIT AND STABILIZATION CHART ABOVE. TEMPORARY GROUND COVER WILL BE INSTALLED ON ALL EXPOSED SLOPES IN 7 OR 14 DAYS. PERMANENT GROUND COVER WILL BE INSTALLED ON EXPOSED SLOPES WITHIN 15 WORKING DAYS FOLLOWING COMPLETION OF CONSTRUCTION OR DEVELOPMENT.

MAINTENANCE: ALL EROSION AND SEDIMENT CONTROL PRACTICES TO BE INSPECTED WEEKLY AND AFTER EVERY RUNOFF PRODUCING RAINFALL EVENT. NEEDED REPAIRS WILL BE MADE IMMEDIATELY.

NO DISTURBANCE TO TAKE PLACE INSIDE STREAM BUFFERS OR WETLANDS UNTIL ALL REQUIRED ACOE, 404 PERMITS, NCDWQ 401 PERMITS, AND / OR CHATHAM BUFFER IMPACT AUTHORIZATION HAVE BEEN OBTAINED AND COPY OF PERMITS ON-SITE.

MAXIMUM GRADED SLOPE SHALL NOT EXCEED THREE (3) TO ONE (1).

***TOTAL DISTURBED AREA= 0.49 ACRES***

NCDENR SELF-INSPECTION PROGRAM

THE SEDIMENTATION POLLUTION CONTROL ACT WAS AMENDED IN 2006 TO REQUIRE THAT PERSONS RESPONSIBLE FOR LAND-DISTURBING ACTIVITIES INSPECT A PROJECT AFTER EACH PHASE OF THE PROJECT TO MAKE SURE THAT THE APPROVED EROSION AND SEDIMENTATION CONTROL PLAN IS BEING FOLLOWED.

RULES DETAILING THE DOCUMENTATION OF THESE INSPECTIONS TAKE EFFECT OCTOBER 1, 2010.

THE SELF-INSPECTION PROGRAM IS SEPARATE FROM THE WEEKLY SELF-MONITORING PROGRAM OF THE NPDES STORMWATER PERMIT FOR CONSTRUCTION ACTIVITIES. THE FOCUS OF THE SELF-INSPECTION REPORT IS THE INSTALLATION AND MAINTENANCE OF EROSION AND SEDIMENTATION CONTROL MEASURES ACCORDING TO THE APPROVED PLAN. THE INSPECTIONS SHOULD BE CONDUCTED AFTER EACH PHASE OF THE PROJECT, AND CONTINUED UNTIL PERMANENT GROUND COVER IS ESTABLISHED.

THE SELF-INSPECTION REPORT FORM IS AVAILABLE AS AN EXCEL SPREADSHEET FROM THE LAND QUALITY WEB SITE,

http://portal.ncdenr.org/web/lr/erosion

## Seedbed Preparation:

1. Chisel compacted areas and spread topsoil three inches deep over adverse soil conditions, if available.
2. Rip the entire area to six inches deep.
3. Remove all loose rock, roots, and other obstructions leaving surface reasonable smooth and uniform.
4. Apply agricultural lime, fertilizer and superphosphate uniformly and mix with soil (see mixture).
5. Continue tillage until a well-pulverized, firm reasonably uniform seedbed is prepared four to six inches deep.
6. Seed on a freshly prepared seedbed and cover seed lightly with seeding equipment or cultipack after seeding.
7. Mulch immediately after seeding and anchor mulch.
8. Inspect all seeded areas and make necessary repairs for reseedings within the planting season, if possible. If stand should be over 60% damaged, reestablish following the original lime, fertilizer and seeding rates.
9. Consult EFS Environmental Engineers on maintenance treatment and fertilization after permanent cover is established.

Mixture
Agricultural Limestone: 2 tons/acre (3 tons/acre in clay soils)
Fertilizer: 1,000 lbs/acre - 10-10-10
Superphosphate: 500 lbs/acre - 20% analysis
Mulch: 2 tons/acre - small grain straw
Anchor: Asphalt Emulsion at 300 gals/acre

## Seeding Schedule

PERMANENT

| Date | Type | Planting Rate |
|---|---|---|
| Aug 15 - Nov 1 | Tall Fescue | 300 lbs/acre |
| Nov 1 - Mar 1 | Tall Fescue & Abruzzi Rye | 300 lbs/acre |
| Mar 1 - Apr 15 | Tall Fescue | 300 lbs/acre |
| Apr 15 - Jun 30 | Hulled Common Bermudagrass | 25 lbs/acre |
| Jul 1 - Aug 15 | Tall Fescue AND Browntop Millet or Sorghum - Sudan Hybrids *** | 125 lbs/acre (Tall Fescue); 35 lbs/acre (Browntop Millet); 30 lbs/acre (Sorghum - Sudan Hybrids) |

TEMPORARY

| | | |
|---|---|---|
| Mar 1 - Jun 1 | Sericea Lespedeza (scarified) and use the following combinations: | 50 lbs/acre (Sericea Lespedeza); |
| Mar 1 - Apr 15 | Add Tall Fescue | 120 lbs/acre |
| Mar 1 - Jun 30 | Or add Julled Common Bermudagrass | 25 lbs/acre |
| Jun 1 - Sept 1 | Tall Fescue AND Browntop Mullet or Sorghum - Sudan Hybrids *** | 120 lbs/acre (Tall Fescue); 35 lbs/acre (Browntop Mullet); 30 lbs/acre (Sorghum - Sudan Hybrids) |
| Sept 1 - Mar 1 | Sericea Lespedeza (unhulled - unscarified) AND Tall Fescue | 70 lbs/acre (Sericea Lespedeza); 120 lbs/acre (Tall Fescue) |
| Nov 1 - Mar 1 | And Abruzzi Rye | 25 lbs/acre |

Consult EFS Environmental Engineer for additional information concerning other alternatives for vegetation of denuded areas. The above vegetation rates are those which do well under location conditions; other seeding rate combinations are possible.

*** TEMPORARY: Reseed according to optimum season for desired permanent vegetation. Do not allow temporary cover to grow over 12" in height before mowing, otherwise fescue may be shaded out.

## SEEDING DETAILS

SECTION VIEW

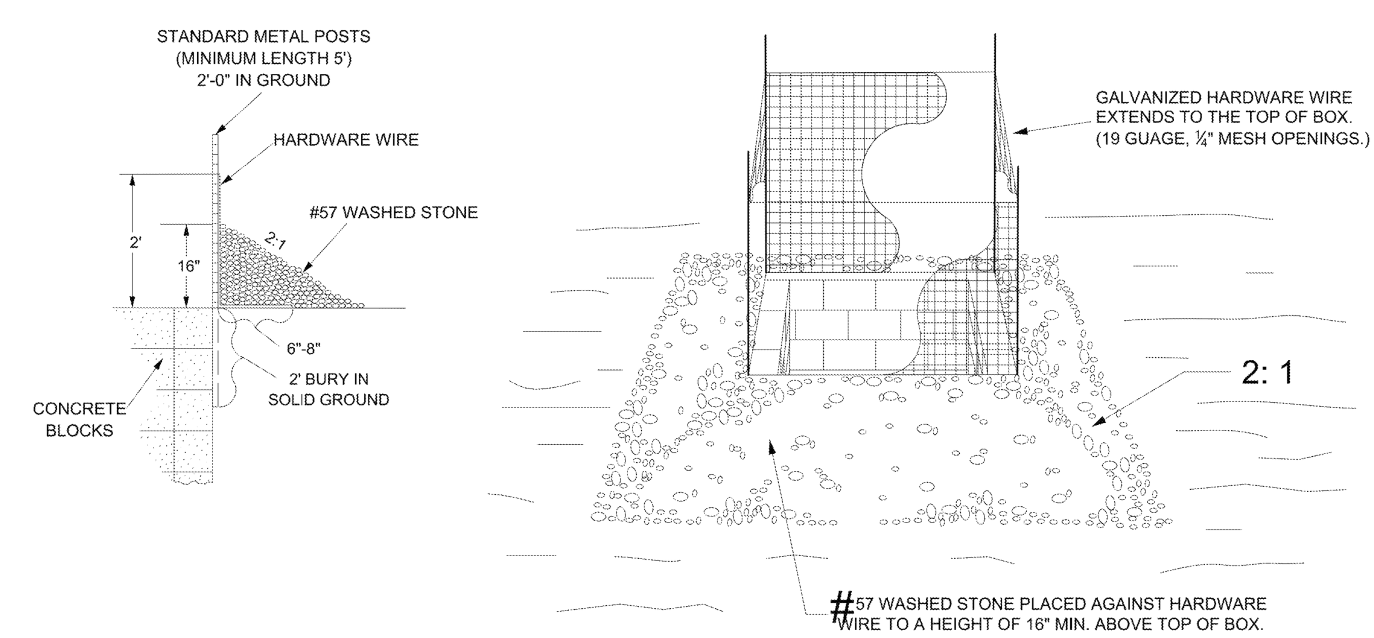


## CATCH BASIN INLET PROTECTION

NTS

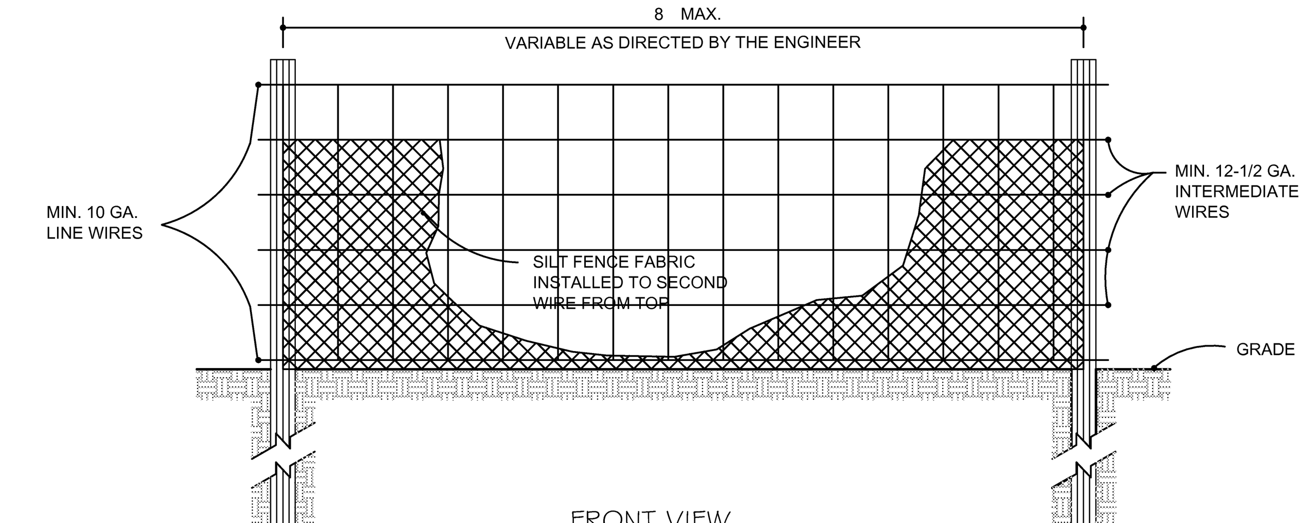


NOTE:

-USE SILT FENCE ONLY WHEN DRAINAGE AREA DOES NOT EXCEED 1/4 ACRE AND NEVER IN AREAS OF CONCENTRATED FLOW

-END OF SILT FENCE NEEDS TO BE TURNED UPHILL.

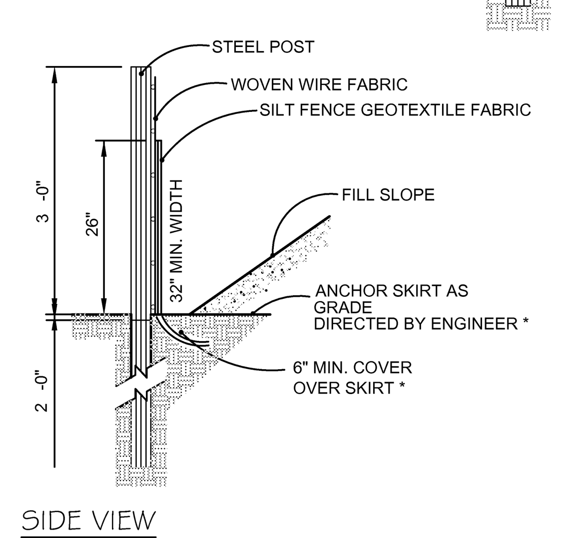


* FOR REPAIR OF SILT FENCE FAILURES, USE No. 57 WASHED STONE. FOR ANCHOR WHEN SILT FENCE IS PROTECTING CATCH BASIN.

## TEMPORARY SILT FENCE

NTS

| REVISIONS | | |
|---|---|---|
| NO. | REVISIONS | DATE |

CE GROUP
301 GLENWOOD AVE. 220
RALEIGH,NC 27603
PHONE: 919-367-8790
FAX: 919-322-0032
www.cegroupinc.com
License # C-1739

NORTH CAROLINA PROFESSIONAL SEAL 1889 ... ASHNES 11/3/15

SITE DEVELOPMENT PLANS
FOR
WEST STREET OFFICE BUILDING
EROSION CONTROL DETAILS
CHATHAM COUNTY, NC

Date: October 2015
Scale: -
Drawn: CPM
Checked: MPA
Project No. 127-190
Computer Dwg. Name 127-190_Sht-08-EC-Details

Sheet No: 8
Of -