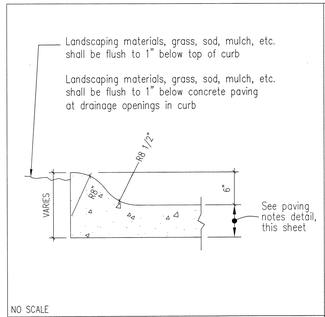

NO SCALE

1 TYPICAL ROLL-OVER CURB

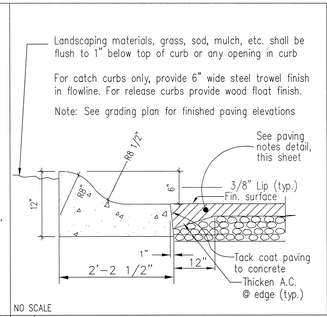

NO SCALE

2 ROLL-OVER CURB at ASPHALT PAVING

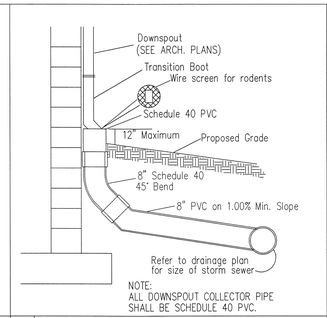

3 DOWNSPOUT DETAIL

DIMENSION & TYPE

Concrete Section	A	B	C
Parking Areas	5"	4"	see note
Loading/Dumpster	6"	4"	see note
Approaches	6"	4"	see note

NOTE: Compacted subgrade should be as specified in soils report.

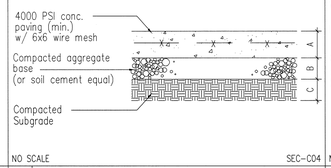

NO SCALE SEC-C04

4 CONCRETE PAVING SECTION

DIMENSION & TYPE

Asphalt Section	A	B	C	D
Drive Aisle	1.5"	2.0"	8"	see note
Parking Areas	1.0"	2.0"	6"	see note
NCDOT R/W	3.0"	4.0"	10"	see note

NOTE: All asphalt paving to be "Heavy Duty". Compacted subgrade should be as specified in soils report.

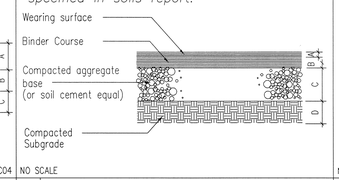

NO SCALE

5 ASPHALT PAVING SECTION

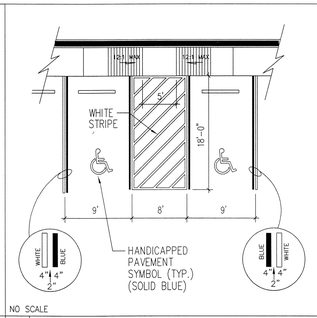

NO SCALE

6 HANDICAP PARKING DETAIL

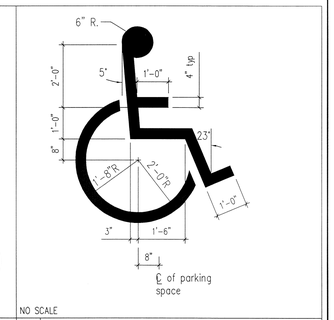

NO SCALE

7 INT'L BARRIER FREE SYMBOL

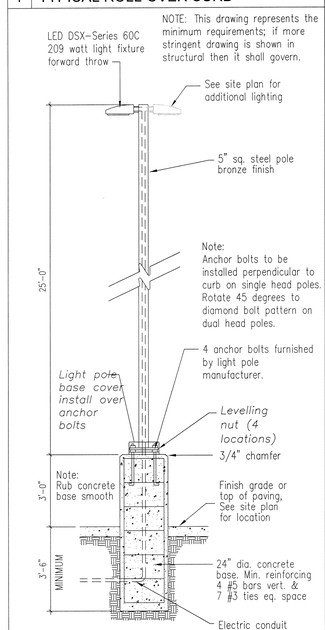

NO SCALE SEC-C13

13 TYPICAL LIGHT POLE

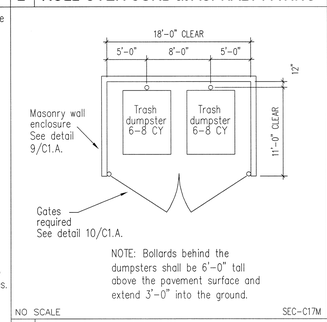

NO SCALE SEC-C17M

8 DUMPSTER LAYOUT

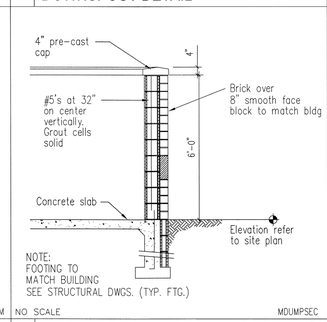

NO SCALE MDUMPSEC

9 DUMPSTER SECTION

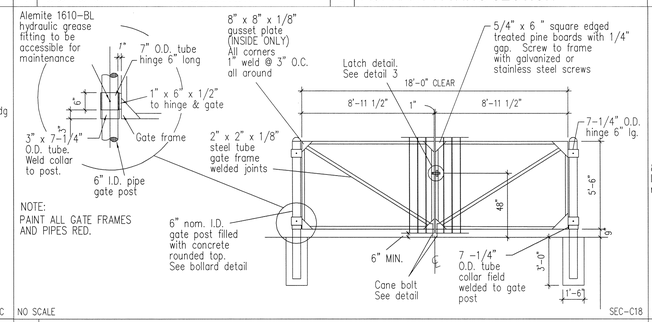

NO SCALE SEC-C18

10 GATE DETAIL FOR DUMPSTER ENCLOSURE

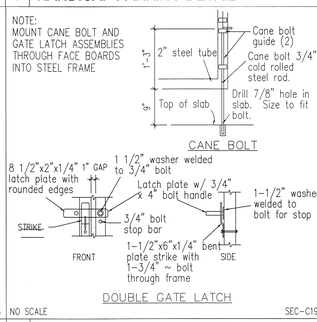

NO SCALE SEC-C19

11 GATE LATCH / BOLT DETAILS

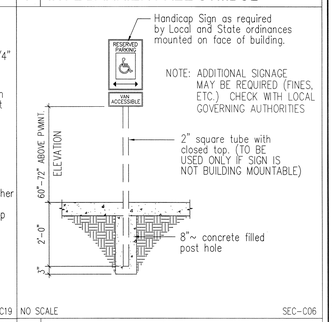

NO SCALE SEC-C06

12 TYPICAL HANDICAP SIGN

NO SCALE SEC-C13

13 TYPICAL LIGHT POLE

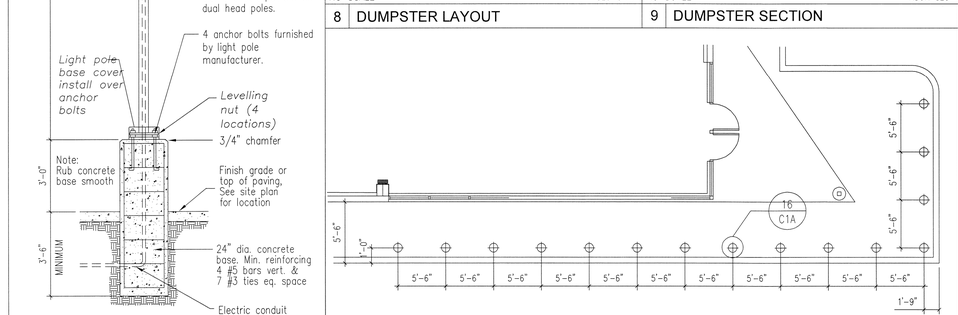

NO SCALE SEC-7n2L

14 BOLLARD LAYOUT PLAN - 7n2

NO SCALE SEC-C08

15 PIPE GUARD @ ROLL-UP DOOR

NO SCALE SEC-C07

16 TYPICAL PIPE GUARD SECTION

NO SCALE SEC-C18

17 WHEEL STOP DETAIL

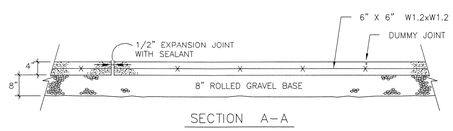

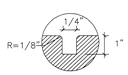

NO SCALE

19 CONCRETE SIDEWALK

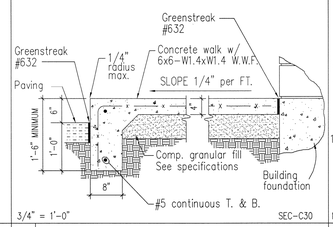

3/4" = 1'-0" SEC-C30

20 TYPICAL WALK SECTION

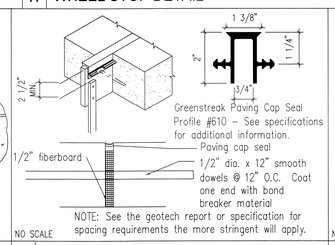

NO SCALE

21 TYPICAL EXPANSION JOINT

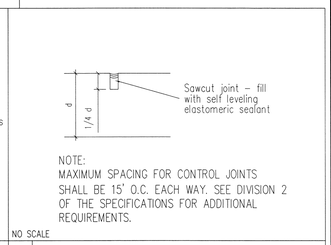

NO SCALE

22 TYPICAL CONTROL JOINT

For all details on this sheet which call for a minimum depth of concrete, that depth shall be adjusted to the deeper of that called for in the detail or the frost depth shown in the Geotechnical Report.

23 FROST DEPTH NOTES

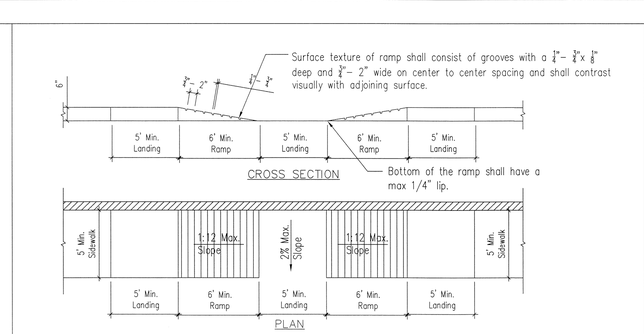

24 HANDICAP PARKING RAMP

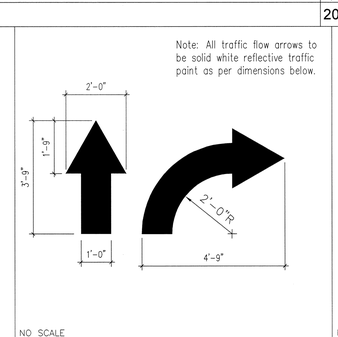

NO SCALE

25 TYPICAL PAVEMENT MARKINGS

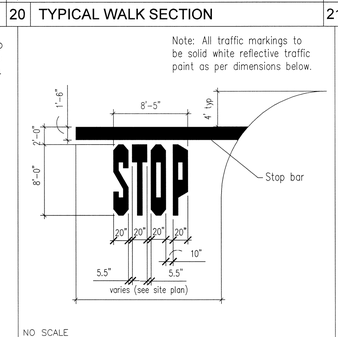

NO SCALE

26 TYPICAL PAVEMENT MARKINGS

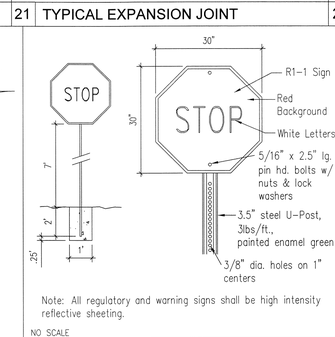

NO SCALE

27 STOP SIGN DETAIL

TRIANGLE SITE DESIGN

CONSULTANT:
TRIANGLE SITE DESIGN, PLLC
4006 BARRETT DR, STE 203
RALEIGH, NC 27609
(919) 553-6570
LICENSE #P-0619

SEAL:

AutoZone

STORE NUMBER: 4378
US Highway 15-501 &
Rock Springs Church Cemetery Road
Pittsboro, NC
Chatham County

OWNER/DEVELOPER:
AUTOZONE DEVELOPMENT LLC.
ATTN. WADE DAVIS
123 S. FRONT STREET
3RD FLOOR
MEMPHIS, TN 38103-2107
PHONE: (901) 495-8701
FAX: (901) 495-8969
wade.davis@autozone.com
For Bidding & Contractor Information Contact:
F.W. Dodge Plan Room Tel: (615) 884-1017

REVISIONS:

5/13/16 REVISED PER TOWN OF PITTSBORO REVIEW

LAYOUT COORD:	MEL
PLANNING MGR.	MEL
DRAWING BY:	MEL
DATE:	April 18, 2016
JOB NUMBER:	010052

TITLE:

SITE DETAILS

SHEET NUMBER:

C1.A

COMMENTS: