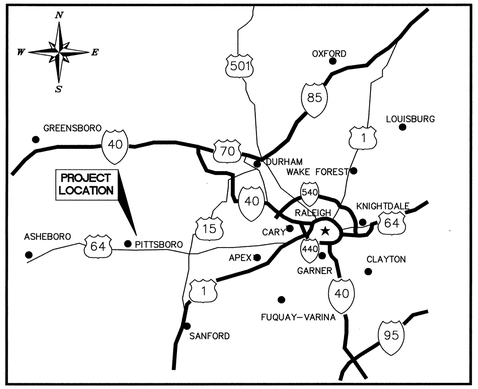

PROJECT LOCATION (NTS)

SITE PLAN SUBMITTAL FOR

CHATHAM MEDICAL OFFICE BUILDING

SUTTLES ROAD
PITTSBORO, NC

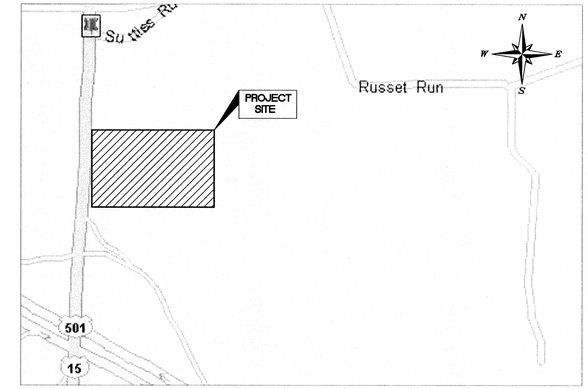

VICINITY MAP 1"=500'

A DEVELOPMENT BY: CHATHAM PARK INVESTORS LLC

100 WESTON ESTATES WAY
CARY, NC 27513
PH: (919) 481-3000

CONTACTS

OWNER: CHATHAM PARK INVESTORS LLC
100 WESTON ESTATES WAY
CARY, NC 27513
PHONE: (919) 481-3000
ATTN.: VANESSA JENKINS

LANDSCAPE ARCHITECT: KIMLEY-HORN AND ASSOCIATES, INC.
333 FAYETTEVILLE STREET, SUITE 600
RALEIGH, NORTH CAROLINA 27601
PHONE: (919) 653-2976
ATTN.: RICHARD BROWN, PLA
Richard.Brown@kimley-horn.com

CIVIL ENGINEER: KIMLEY-HORN AND ASSOCIATES, INC.
333 FAYETTEVILLE STREET, SUITE 600
RALEIGH, NORTH CAROLINA 27601
PHONE: (919) 653-6654
ATTN.: JORDAN BREWER, PE
jordan.brewer@kimley-horn.com

SURVEYOR: WHITHERS & RAVENEL
115 MACKENAN DRIVE
CARY, NC 27511
PHONE: (919) 469-3340

PROJECT DATA

TOWN OF PITTSBORO
SITE PLAN APPLICATION

P.O. Box 759-635 East Street
Pittsboro, NC 27312

Telephone (919) 542-4621
Fax (919) 542-7109

Site Plan - _____

A site plan is a plan required to be submitted prior to development that assures the proposed development complies with the standards in the zoning and subdivision ordinances (such as residential density, lot area and configuration, building size, mass, and design, and other site features like parking or landscaping), and other applicable requirements in the code of ordinance. All development plans must be prepared, sealed, and signed by a professional engineer or licensed 3(b) land surveyor.

I, (We) the undersigned, do hereby respectfully make application for a Site Plan of the Town of Pittsboro, and in support of this application, the following facts are shown:

(1) Applicant Information:

Name: Chatham Park Investors LLC
Address: 100 Weston Estates Way
Cary, NC 27513
Phone No: (h) NA
(w) (919) 481-3000
(m) NA
Email: info@prestondev.com

(2) Landowner Information (as shown on deed)

Name: Chatham Park Investors LLC
Address: PO BOX 3557
Cary, NC 27519
Phone No: (h) NA
(w) (919) 481-3000
(m) NA
Email: info@prestondev.com

(3) Property Identification:

911 Address: TBD
S.R. Name: Suttles Road
S.R. Number: 1809
Acreage: 32.49
Flood map #: 3710975200J
Flood Zone: No
Map Date (2-07-2007)

Tax Map #: 60745 (AKPAR)
Parcel#: 9752-08-9484
Deed Book: 1567 Page: 0800 Yr: 2011
Plat Book: 2012 Page: 0189
Current Zoning District: C-2
Watershed District: WS-IV NSW

2

911 Address: TDB
S.R. Name: Suttles Road
S.R. Number: 1809
Acreage: 149.17
Flood map #: 3710975200J
Flood Zone: No
Map Date (2-07-2007)

Tax Map #: 7101 (AKPAR)
Parcel#: 9752-27-6874
Deed Book: 1567 Page: 0800 Yr: 2011
Plat Book: 2012 Page: 0189
Current Zoning District: R-A2
Watershed District: WS-IV NSW

*** Total site plan project area = 5.99 Acres
Application submitted subject to approval of zoning case REZ - 2013 - 02

I hereby certify that I am the owner or authorized agent of said property and that the information provided is complete and the statements given are true to the best of my knowledge.

Signature _____ Date 1-28-14

The owner must sign the following if someone other than the owner is making the application.

I hereby certify that Philip Culpepper is an authorized agent for said property and is permitted by me to file this application.

Signature _____ Date 1-28-14

Form revised 04/05/13

INDEX TO SHEETS

Sheet List Table

Sheet Number	Sheet Title
C-000	COVER SHEET
C-001	LEGEND AND GENERAL NOTES
C-100	EXISTING CONDITIONS
C-200	PHASE 1 EROSION CONTROL PLAN
C-201	PHASE 2 EROSION CONTROL PLAN
C-300	SITE PLAN
C-400	GRADING AND DRAINAGE PLAN
C-401	GRADING AND DRAINAGE PLAN
C-500	UTILITY PLAN
C-501	UTILITY PROFILES
C-600	SITE DETAILS
C-601	SITE DETAILS
C-700	BIORETENTION AREA DETAILS
C-701	BIORETENTION AREA DETAILS
C-702	STORM DRAINAGE DETAILS
C-800	UTILITY DETAILS
C-900	EROSION CONTROL DETAILS
C-901	EROSION CONTROL DETAILS
L-100	LANDSCAPE PLAN
L-200	LANDSCAPE DETAILS
LT-100	SITE LIGHTING PLAN

REVISIONS

NO.	DATE	DESCRIPTION	BY
6			
5			
4			
3	7/18/14	NCDENR EXPRESS REVIEW COMMENTS	KCG
2	7/16/14	REVISED PER TOWN OF PITTSBORO 2ND COMMENTS	BTO
1	5/21/14	REVISED PER TOWN OF PITTSBORO 1ST COMMENTS	WJB

This document, together with the concepts and designs presented herein, as an instrument of services, is intended only for the specific purpose and client for which it was prepared. Reuse of and improper reliance on this document without written authorization and adaptation by Kimley-Horn and Associates, Inc. shall be without liability to Kimley-Horn and Associates, Inc.

Copyright Kimley-Horn and Associates, Inc., 2014

NORTH CAROLINA PROFESSIONAL SEAL 039196 ENGINEER W. JORDAN BREWER
SEAL: 7/18/14

DRAWING:

DATE: JANUARY 28, 2014

JOB NUMBER: 012325022

PREPARED IN THE OFFICE OF:

Kimley»Horn

© 2014 Kimley-Horn and Associates, Inc.

NC CERTIFICATE OF AUTHORIZATION: F-0102

Plotted By:Brewer, Jordan Sheet: Set:Chatham mob\planning phase\15_cad files\plansheets\C-001 LEGEND AND GENERAL NOTES July 15, 2014 07:31:23pm K:\RDT_LDEV\012325022_chatham mob\planning phase\15_cad files\plansheets\C-001 LEGEND AND GENERAL NOTES.dwg
This document, together with the concepts and designs presented herein, as an instrument of service, is intended only for the specific purpose and client for which it was prepared. Reuse of and improper reliance on this document without written authorization and adaptation by Kimley-Horn and Associates, Inc. shall be without liability to Kimley-Horn and Associates, Inc.

EXISTING LEGEND

LEGEND:

CATCH BASIN	CB
EXISTING IRON PIPE	EIP
WATER METER	WM
EDGE OF PAVEMENT	EOP
CURB & GUTTER	CG
CATCH BASIN	CB
SEWER MANHOLE	S
WATER MANHOLE	W
UTILITY POLE	
TREE	1928
LEFT TURN ARROW	

LINETYPE LEGEND:

ADJOINER	
BOUNDARY	
EASEMENT	
STORM DRAINAGE	
SANITARY SEWER	SS
CURB AND GUTTER	
TREELINE	
OVERHEAD ELECTRIC	OHE
FENCE	XX
PAVEMENT MARKING (BROKEN WHITE STRIPE)	
PAVEMENT MARKING (SOLID YELLOW STRIPE)	

PROPOSED LEGEND

LIGHT POLE	
COMMUNICATIONS BOX	C
FIRE HYDRANT	
GATE VALVE	
CATCH BASIN	
SEWER MANHOLE	S
TREE	
SIGN	
PROPERTY/ROW	
SETBACK	
EASEMENT	
CENTERLINE	
MONUMENT	
IRON PIPE/ROD	
EDGE PAVEMENT	
CURBLINE	
SPILL CURB	
CONTOURS (MAJOR)	445
CONTOURS (MINOR)	442
OVERHEAD POWER	OP
FIBER OPTIC	FO
GAS	G
WATER	W
SANITARY SEWER	SS
STORM DRAIN	
UNDERGROUND ELEC	E
UNDERGROUND TEL	T
INLET PROTECTION	
RETAINING WALL	
SILT FENCE	SF
TREE PROTECTION FENCE	TPF
BENCHMARK	
UTILITIES AND FENCE TO BE REMOVED	
POLE, TREE OR SIGN TO BE REMOVED	X
PAVEMENT & CURB AND GUTTER BE REMOVED	
PAVEMENT & CURB AND GUTTER BE REMOVED	
PAVEMENT & CURB AND GUTTER BE REMOVED	
CONSTRUCTION ENTRANCE	
PAVEMENT MARKING DIRECTIONAL ARROWS	
PROPOSED CONCRETE	
TYPICAL FOR SIMILAR AREAS	(TYP)
PROPOSED HANDICAPPED PARKING PAVEMENT MARKINGS & SIGNAGE	
IPF	
PROPOSED SPOT ELEVATIONS	+100.00
FIRELANE	
DIVERSION DITCH	TD TD

GENERAL NOTES:

1. CONTRACTOR SHALL REFER TO ARCHITECTURAL PLANS FOR PRECISE BUILDING DIMENSIONS, BUILDING UTILITY ENTRANCE LOCATIONS, AND EXACT LOCATIONS AND DIMENSIONS OF EXIT PORCHES, RAMPS, DOWNSPOUTS, GRAVEL AREAS ADJACENT TO BUILDING WALLS, UTILITY ENTRANCE LOCATIONS AND BOLLARDS IN BUILDING SIDEWALKS.
2. ACCESSIBLE SIGNS WITH A "VAN" MARKING SHALL HAVE ADDITIONAL SIGN MOUNTED ABOVE THE SYMBOL OF ACCESSIBILITY SIGN DENOTING VAN ACCESSIBILITY.
3. REFER TO DETAIL SITE SHEETS FOR DETAILS OF ON-SITE SIGNAGE, STRIPING, AND PAVEMENT MARKING. REFER TO SITE PLAN FOR ADDITIONAL DIMENSIONAL INFORMATION.
4. ALL WORK AND MATERIALS SHALL COMPLY WITH ALL CITY, COUNTY, AND STATE REGULATIONS AND CODES AND O.S.H.A. STANDARDS.
5. ALL ISLANDS WITH CURB & GUTTER SHALL BE LANDSCAPED. THOSE ISLANDS ARE TO HAVE CURB & GUTTER AS SHOWN ON THE CONSTRUCTION DRAWINGS.
6. SITE BOUNDARY, TOPOGRAPHY, UTILITY, TREE, AND ROAD INFORMATION TAKEN FROM FIELD SURVEYS BY WITHERS & RAVENEL, PROFESSIONAL LAND SURVEYORS DATED FEBRUARY 15, 2013.
7. THE CONTRACTOR SHALL EMPLOY ALL NECESSARY BARRICADES, SIGNS, FENCES, FLASHING LIGHTS, TRAFFIC MEN, ETC. FOR MAINTENANCE AND PROTECTION OF TRAFFIC AS REQUIRED BY THE NORTH CAROLINA DEPT. OF TRANSPORTATION (NCDOT).
8. THE CONTRACTOR SHALL PROTECT ALL MONUMENTS, IRON PINS, AND PROPERTY CORNERS DURING CONSTRUCTION.
9. THE CONTRACTOR SHALL REPLACE EXISTING CONCRETE CURBS, SIDEWALK, PAVING, AND GUTTER AS NECESSARY.
10. APPROVAL OF THIS PLAN IS NOT AN AUTHORIZATION TO GRADE ADJACENT PROPERTIES. WHEN FIELD CONDITIONS WARRANT OFF-SITE GRADING, PERMISSION MUST BE OBTAINED FROM THE AFFECTED PROPERTY OWNERS.
11. CONTRACTOR AGREES TO REPAIR ANY DAMAGE TO THE PUBLIC RIGHT-OF-WAY IN ACCORDANCE WITH THE STANDARDS OF THE NCDOT.
12. THE CONTRACTOR SHALL IMMEDIATELY REPORT TO THE OWNER ANY DISCREPANCIES FOUND BETWEEN THE ACTUAL FIELD CONDITIONS AND THE CONSTRUCTION DOCUMENTS AND SHALL WAIT FOR INSTRUCTION PRIOR TO PROCEEDING.
13. ALL SITE DIMENSIONS ARE REFERENCED TO THE FACE OF CURB OR EDGE OF PAVEMENT UNLESS OTHERWISE NOTED. ALL BUILDING DIMENSIONS ARE REFERENCED TO THE OUTSIDE FACE OF THE STRUCTURE.
14. SIGHT TRIANGLES SHOWN ARE THE MINIMUM REQUIRED.
15. ALL CONSTRUCTION MUST BE PERFORMED IN ACCORDANCE WITH CURRENT NCDOT AND TOWN OF PITTSBORO STANDARD SPECIFICATIONS AND DETAILS.
16. ALL WORK MUST COMPLY WITH NORTH CAROLINA STATE BUILDING AND HANDICAPPED ACCESSIBILITY CODE VOL. 1C.
17. VERTICAL DATUM FOR SURVEY IS NAVD 88.

TREE PROTECTION NOTES:

1. THE CONTRACTOR SHALL PROTECT ALL TREES AND SHRUBS OUTSIDE OF CUT/FILL LINES, IN ADDITION TO THOSE THAT RECEIVE TREE/SHRUB PROTECTION BARRIERS. THE CONTRACTOR IS ALSO REQUESTED TO SAVE ALL OTHER EXISTING TREES AND SHRUBS WHERE POSSIBLE.
2. WHEN ROOT PRUNING IS NECESSARY, CUT ROOTS CLEANLY USING A DISC TRENCHER AND IMMEDIATELY COVER ALL ROOT CUT SURFACES LARGER THAN TWO INCHES IN DIAMETER WITH TREE WOUND DRESSING. USE PLYWOOD FORMS WHEN TREE ROOTS ARE ADJACENT TO PROPOSED CURB & GUTTER OR SIDEWALK.
3. NO SOIL DISTURBANCE OR COMPACTION, CONSTRUCTION MATERIALS, TRAFFIC, BURIAL PITS, TRENCHING OR OTHER LAND DISTURBING ACTIVITY ALLOWED IN THE TREE PROTECTION ZONE. TREE BARRICADES MUST BE INSTALLED BEFORE ANY DEMOLITION, GRADING OR CONSTRUCTION BEGINS, AND NOT REMOVED UNTIL FINAL INSPECTION.
4. NO GRUBBING WITHIN TREE PROTECTION ZONE. LEAVE SOIL AND LEAF LITTER UNDISTURBED. SUPPLEMENT WITH 1-2 INCHES OF MULCH. RE-SEED WITH GRASS ONLY IN DISTURBED/GRADED AREAS.
5. TREE BARRICADES MUST BE INSTALLED BEFORE ANY DEMOLITION, CLEARING, GRADING OR CONSTRUCTION BEGINS AND IS NOT TO BE REMOVED UNTIL AFTER CONSTRUCTION.

TRAFFIC CONTROL:

1. REFER TO MANUAL ON UNIFORM TRAFFIC CONTROL DEVICES (LATEST EDITION) FOR DETAILS OF STANDARD TRAFFIC CONTROL SIGNS AND STANDARDS.

DEMOLITION NOTES:

A. CONTRACTOR SHALL COORDINATE WITH THE TOWN OF PITTSBORO TO OBTAIN ALL NECESSARY DEMOLITION PERMITS PRIOR TO THE START OF ANY DEMOLITION WORK.

B. SAW CUT AND REMOVE CONCRETE CURB TO LIMITS REQUIRED FOR NEW WORK.

C. REMOVE VEGETATION AND GRASS IN AREAS TO RECEIVE NEW ASPHALT AND CONCRETE PAVEMENTS.

D. SAW CUT AND REMOVE ASPHALT PAVEMENT TO LIMITS INDICATED ON PLAN.

E. THE CONTRACTOR SHALL DEMOLISH AND REMOVE FACILITIES WITHIN THE PROJECT SITE TO INCLUDE BUILDINGS, CONCRETE STRUCTURES (ABOVE GROUND AND FOUNDATION), SITE LIGHTING STRUCTURES, PAVEMENTS, AND SECONDARY UTILITIES. ALL MATERIALS SHALL BE PROPERLY DISPOSED OF OFF-SITE PER STATE REGULATIONS.

F. ALL PRIMARY UTILITIES DISCOVERED DURING DEMOLITION OPERATIONS THAT SERVE ACTIVITIES OTHER THAN THE PROJECT SITE SHALL BE PROPERLY PRESERVED AND PROTECTED.

G. THE CONTRACTOR SHALL IMMEDIATELY REPORT TO THE OWNER AND ENGINEER ANY UNFORESEEN OR ADVERSE CONDITIONS, INCLUDING UNCHARTED UTILITIES, DISCOVERED DURING DEMOLITION OPERATIONS.

BACKFLOW PREVENTION NOTES:

1. THERE SHALL BE NO TAPS, PIPING BRANCHES, UNAPPROVED BYPASS PIPING, HYDRANTS, FIRE DEPARTMENT CONNECTION POINTS OR OTHER WATER-USING APPURTENANCES CONNECTED TO THE SUPPLY LINE BETWEEN ANY WATER METER AND ITS REQUIRED BACKFLOW PREVENTER.
2. EACH BACKFLOW PREVENTER ASSEMBLY IS REQUIRED TO BE TESTED BY AN APPROVED CERTIFIED TESTER PRIOR TO PLACING THE WATER SYSTEM INTO SERVICE.

GRADING:

1. ALL WORK AND MATERIALS SHALL COMPLY WITH ALL TOWN OF PITTSBORO AND NORTH CAROLINA DEPARTMENT OF TRANSPORTATION (NCDOT) REGULATIONS AND CODES AND O.S.H.A. STANDARDS.
2. ALL PROPOSED CONTOURS AND SPOT ELEVATIONS REFLECT FINISHED GRADES.
3. ALL ELEVATIONS ARE IN REFERENCE TO THE BENCHMARK, AND THIS MUST BE VERIFIED BY THE GENERAL CONTRACTOR PRIOR TO GROUND BREAKING.
4. THE CONTRACTOR SHALL IMMEDIATELY REPORT TO OWNER ANY DISCREPANCIES FOUND BETWEEN ACTUAL FIELD CONDITIONS AND CONSTRUCTION DOCUMENTS AND SHALL WAIT FOR INSTRUCTION PRIOR TO PROCEEDING.
5. THE CONTRACTOR SHALL BE RESPONSIBLE FOR LOCATING AND PROTECTING EXISTING UTILITIES, AND SHALL REPAIR ALL DAMAGE TO EXISTING UTILITIES THAT OCCUR DURING CONSTRUCTION.
6. CONTRACTOR SHALL BLEND NEW EARTHWORK SMOOTHLY TO TRANSITION BACK TO EXISTING GRADE.
7. ALL FILL TO BE COMPACTED PER THE RECOMMENDATIONS OF A GEOTECHNICAL ENGINEER.
8. LIMITS OF CLEARING SHOWN ON GRADING PLAN ARE BASED UPON THE APPROXIMATE CUT AND FILL SLOPE LIMITS, OR OTHER GRADING REQUIREMENTS.
9. THE PROPOSED CONTOURS SHOWN IN DRIVES AND PARKING LOTS AND SIDEWALKS ARE FINISHED ELEVATIONS INCLUDING ASPHALT. REFER TO PAVEMENT CROSS SECTION DATA TO ESTABLISH CORRECT SUBBASE OR AGGREGATE BASE COURSE ELEVATIONS TO BE COMPLETED UNDER THIS CONTRACT.
10. CONTRACTOR SHALL INSURE POSITIVE DRAINAGE SO THAT RUNOFF WILL DRAIN BY GRAVITY FLOW ACROSS NEW PAVEMENT AREAS TO NEW OR EXISTING DRAINAGE INLETS OR SHEET OVERLAND.
11. ANY GRADING, BEYOND THE LIMITS OF CONSTRUCTION AS SHOWN ON THE GRADING PLAN IS SUBJECT TO A FINE.
12. TOPOGRAPHIC INFORMATION TAKEN FROM A TOPOGRAPHIC SURVEY BY WITHERS & RAVENEL, PROFESSIONAL LAND SURVEYORS DATED FEBRUARY 15, 2013.
13. THE CONTRACTOR SHALL ADHERE TO ALL TERMS & CONDITIONS AS OUTLINED IN THE GENERAL N.P.D.E.S. PERMIT FOR STORMWATER DISCHARGE ASSOCIATED WITH CONSTRUCTION ACTIVITIES.
14. ALL UNSURFACED AREAS DISTURBED BY GRADING OPERATION SHALL RECEIVE 4 INCHES OF TOPSOIL.
15. CONTRACTOR SHALL GRASS DISTURBED AREAS UNTIL A HEALTHY STAND OF GRASS IS OBTAINED.
16. CONSTRUCTION SHALL COMPLY WITH ALL APPLICABLE GOVERNING CODES AND BE CONSTRUCTED TO SAME.
17. THE CONTRACTOR IS RESPONSIBLE FOR THE DESIGN AND IMPLEMENTATION OF ALL SHEETING, SHORING, BRACING AND SPECIAL EXCAVATION MEASURES REQUIRED TO MEET OSHA, FEDERAL, STATE AND LOCAL REGULATIONS PURSUANT TO THE INSTALLATION OF THE WORK INDICATED ON THESE DRAWINGS. THE DESIGN ENGINEER ACCEPTS NO RESPONSIBILITY FOR THE DESIGN(S) TO INSTALL SAID ITEMS.
18. THE CONTRACTOR SHALL INCLUDE IN THE CONTRACT PRICE ANY DEWATERING NECESSARY TO CONSTRUCT THE PROJECT AS SHOWN ON THE PLANS.
19. THE CONTRACTOR SHALL REFER TO THE ARCHITECTURAL PLANS FOR EXACT BUILDING DIMENSIONS AND EXACT UTILITY ENTRANCE LOCATIONS AND ELEVATIONS.
20. ALL FILL MATERIALS, EXISTING BUILDING FOUNDATIONS, PAVEMENT AND UTILITY STRUCTURES, TOPSOIL AND ANY OTHER DELETERIOUS MATERIALS SHALL BE COMPLETELY REMOVED FROM WITHIN THE BEARING ZONE BELOW THE STRUCTURE.
21. ALL FOUNDATION AND UTILITY EXCAVATION SHALL BE INSPECTED BY A QUALIFIED GEOTECHNIAL REPRESENTATIVE TO DETERMINE WHETHER UNSUITABLE MATERIAL MUST BE REMOVED. ALL UNDESIRABLE MATTER SHALL BE REMOVED, BACKFILLED AND COMPACTED WITH SUITABLE MATERIAL AS REQUIRED BY THE GEOTECHNICAL REPRESENTATIVE AT CONTRACTOR'S EXPENSE.
22. GRADES, ELEVATIONS AND LOCATIONS SHOWN ARE APPROXIMATE. AS DIRECTED BY THE ENGINEER, THEY MAY BE ADJUSTED TO ACCOMMODATE UNFORESEEN CONDITIONS. STATIONS, OFFSETS AND ELEVATIONS REFER TO THE CENTER OF DROP INLETS, MANHOLES AND JUNCTION BOXES, AND THE MIDPOINT OF THE LIP FOR CATCH BASINS.
23. CONTRACTOR SHALL ADJUST AND/OR CUT EXISTING PAVEMENT AS NECESSARY TO ASSURE A SMOOTH FIT AND CONTINUOUS GRADE.
24. EXISTING AND PROPOSED GRADE CONTOUR INTERVALS SHOWN AT 1 FOOT.
25. CONTRACTOR IS RESPONSIBLE FOR DEMOLITION OF EXISTING STRUCTURES INCLUDING REMOVAL OF ANY EXISTING UTILITIES SERVING THE STRUCTURE. UTILITIES ARE TO BE REMOVED TO THE RIGHT-OF-WAY.
26. BEFORE ANY EARTHWORK IS DONE, THE CONTRACTOR SHALL STAKE OUT AND MARK THE LIMITS OF PAVEMENT AND OTHER ITEMS ESTABLISHED IN THE PLANS. THE CONTRACTOR SHALL PROVIDE ALL NECESSARY ENGINEERING AND SURVEYING FOR LINE AND GRADE CONTROL POINTS RELATED TO EARTHWORK.
27. ALL PAVEMENT SUB GRADES SHALL BE SCARIFIED TO A DEPTH OF 8 INCHES AND COMPACTED TO A MINIMUM DENSITY OF 98 PERCENT OF ASTM D-698 DENSITY AT OPTIMUM MOISTURE CONTENT UNLESS OTHERWISE SHOWN ON THE CONSTRUCTION PLANS OR AS DIRECTED BY THE GEOTECHNICAL ENGINEER. FILL SHALL BE PLACED AND COMPACTED IN MAXIMUM 8" LIFTS. IN AREAS WHERE ROCK IS ENCOUNTERED AT FINAL SUB GRADE ELEVATION, THE EXPOSED ROCK SHALL BE TOPPED WITH A LEVELING COURSE OF SANDY CLAY OR CLAYEY SAND (P.I. BETWEEN 4 AND 15) AS NEEDED TO PROVIDE A SMOOTH SURFACE FOR PAVING.
28. THE CONTRACTOR SHALL CLEAR AND GRUB THE SITE AND PLACE, COMPACT, AND MOISTURE CONDITION ALL FILL PER THE PROJECT GEOTECHNICAL ENGINEER'S SPECIFICATIONS. THE FILL MATERIAL TO BE USED SHALL BE APPROVED BY THE GEOTECHNICAL ENGINEER PRIOR TO PLACEMENT.
29. TESTING OF MATERIALS REQUIRED FOR THE CONSTRUCTION OF THE PAVING IMPROVEMENTS SHALL BE PERFORMED BY AN APPROVED AGENCY FOR TESTING MATERIALS. THE TESTING LABORATORY AND THE PAYMENT OF SUCH TESTING SERVICES SHALL BE MADE BY THE OWNER. IT SHALL BE THE CONTRACTOR'S RESPONSIBILITY TO SHOW BY STANDARD TESTING PROCEDURES THAT THE WORK CONSTRUCTED DOES MEET THE REQUIREMENTS OF THE SPECIFICATIONS.
30. THE LOCATIONS OF STORM SEWER STRUCTURES SHOWN ON THESE PLANS (AND PROVIDED IN ASSOCIATED CADD FILES) ARE APPROXIMATE. THE CONTRACTOR SHALL STAKE ALL CURB INLET STRUCTURES SUCH THAT INLET TOPS ALIGN HORIZONTALLY WITH PROPOSED FINISHED GRADE (PER DETAIL, IF PROVIDED). WHERE PROPOSED STORM SEWERS TIE TO EXISTING STRUCTURES, PIPES, ETC., THE CONTRACTOR SHALL FIELD ADJUST PROPOSED STORM SEWERS TO MATCH THE LOCATIONS OF THESE EXISTING FEATURES.

SOLID WASTE:

1. CAPACITY AND COLLECTION FREQUENCY SHALL PREVENT THE ILLEGAL PLACEMENT OF GARBAGE AND RECYCLABLES.

TOWN OF PITTSBORO STANDARD UTILITY NOTES:

1. OWNER / CONTRACTOR SHALL NOTIFY TOWN OF PITTSBORO AT LEAST 48 HOURS PRIOR TO BEGINNING ANY CONSTRUCTION WORK. ONCE WORK HAS BEGUN, AT LEAST 48 HOURS NOTICE SHALL BE GIVEN PRIOR TO ANY SORT OF DISRUPTION TO THE TOWN'S SERVICES SUCH AS TAPPING WATER MAIN, OPERATING VALVES, CLOSING STREETS, PLUGGING SEWER, ETC.
2. UTILITY SEPARATION REQUIREMENTS:

A) A DISTANCE OF 100' SHALL BE MAINTAINED BETWEEN SANITARY SEWER & ANY PRIVATE OR PUBLIC WATER SUPPLY SOURCE SUCH AS AN IMPOUNDED RESERVOIR USED AS A SOURCE OF DRINKING WATER. IF ADEQUATE LATERAL SEPARATION CANNOT BE ACHIEVED, FERROUS SANITARY SEWER PIPE SHALL BE SPECIFIED & INSTALLED TO WATERLINE SPECIFICATIONS. HOWEVER, THE MINIMUM SEPARATION SHALL NOT BE LESS THAN 25' FROM A PRIVATE WELL OR 50' FROM A PUBLIC WELL.

B) WHEN INSTALLING WATER &/OR SEWER MAINS, THE HORIZONTAL SEPARATION BETWEEN UTILITIES SHALL BE 10'. IF THIS SEPARATION CANNOT BE MAINTAINED DUE TO EXISTING CONDITIONS, THE VARIATION ALLOWED IS THE WATER MAIN IN A SEPARATE TRENCH WITH THE ELEVATION OF THE WATER MAIN AT LEAST 18" ABOVE THE TOP OF THE SEWER. ALL DISTANCES ARE MEASURED FROM OUTSIDE DIAMETER TO OUTSIDE DIAMETER.

C) WHERE IT IS IMPOSSIBLE TO OBTAIN PROPER SEPARATION, OR ANYTIME A SANITARY SEWER PASSES OVER A WATERMAIN, DIP MATERIALS OR STEEL ENCASEMENT EXTENDED 10' ON EACH SIDE OF CROSSING MUST BE SPECIFIED & INSTALLED TO WATERLINE SPECIFICATIONS.

D) MAINTAIN 18" MIN. VERTICAL SEPARATION AT ALL WATERMAIN AND RCP STORM DRAIN CROSSINGS. MAINTAIN 24" MIN. VERTICAL SEPARATION AT ALL SANITARY SEWER & RCP STORM DRAIN CROSSING. WHERE ADEQUATE SEPARATIONS CANNOT BE ACHIEVED, SPECIFY DIP MATERIALS & A CONCRETE CRADLE HAVING 6" MIN. CLEARANCE.

3. ANY NECESSARY FIELD REVISIONS ARE SUBJECT TO REVIEW & APPROVAL OF AN AMENDED PLAN &/OR PROFILE BY THE TOWN OF PITTSBORO PUBLIC UTILITIES DEPARTMENT.
4. CONTRACTOR SHALL MAINTAIN CONTINUOUS WATER & SEWER SERVICE TO EXISTING RESIDENCES & BUSINESSES THROUGHOUT CONSTRUCTION OF PROJECT. ANY NECESSARY SERVICE INTERRUPTIONS SHALL BE PRECEDED BY A 48 HOUR ADVANCE NOTICE TO THE TOWN OF PITTSBORO PUBLIC UTILITIES DEPARTMENT.
5. 3.0' MINIMUM COVER IS REQUIRED ON ALL WATER MAINS.
6. PRESSURE REDUCING VALVES ARE REQUIRED ON ALL WATER SERVICES EXCEEDING 80 PSI; BACKWATER VALVES ARE REQUIRED ON ALL SANITARY SEWER SERVICES HAVING BUILDING DRAINS LOWER THAN 1.0' ABOVE THE NEXT UPSTREAM MANHOLE.
7. ALL ENVIRONMENTAL PERMITS APPLICABLE TO THE PROJECT MUST BE OBTAINED FROM NCDWQ, USACE, AND/OR FEMA FOR ANY RIPARIAN BUFFER, WETLAND, &/OR FLOODPLAIN IMPACTS (RESPECTIVELY).

TOWN OF PITTSBORO UTILITY NOTIFICATION NOTE:

1. THE OWNER/CONTRACTOR SHALL NOTIFY THE TOWN OF PITTSBORO AT LEAST 48 HOURS PRIOR TO BEGINNING ANY CONSTRUCTION WORK. ONCE WORK HAS BEGUN, AT LEAST 48 HOURS NOTICE SHALL BE GIVEN PRIOR TO ANY SORT OF DISRUPTION TO THE TOWN'S SERVICES SUCH AS TAPPING WATER MAINS, OPERATING VALVES, CLOSING STREETS, PLUGGING SEWERS, ETC.
2. NOTIFICATION MUST BE PROVIDED BY DIRECT COMMUNICATION. VOICE MAIL OR EMAIL WILL NOT BE CONSIDERED PROPER NOTIFICATION UNLESS ADEQUATELY RESPONDED TO BY A TOWN OF PITTSBORO REPRESENTATIVE.
3. THE OWNER/CONSTRACTOR SHALL BE RESPONSIBLE FOR NOTIFYING ALL CUSTOMERS AFFECTED BY SERVICES INTERRUPTIONS. THE TOWN OF PITTSBORO WILL NOT APPROVE SERVICE INTERRUPTIONS UNTIL PROOF THAT PROPER CUSTOMER NOTIFICATION HAS BEEN PROVIDED.
4. EXISTING VALVES SHALL BE OPERATED ONLY WITH A REPRESENTATIVE OF THE TOWN OF PITTSBORO PRESENT.

ALL CONSTRUCTION TO BE IN ACCORDANCE WITH ALL TOWN OF PITTSBORO AND/OR NCDOT STANDARDS AND SPECIFICATIONS.

SURVEY NOTE:

ALL EXISTING SITE AND TOPOGRAPHIC INFORMATION SHOWN BASED ON AN ALTA/ACSM LAND TITLE SURVEY DATED FEBRUARY 15, 2013. PROVIDED BY WHITHERS & RAVENEL. 115 MACKENAN DR, CARY NC 27511. PHONE 919-469-3340

No.	REVISIONS	DATE	BY
2	REVISED PER TOWN OF PITTSBORO 2ND COMMENTS	7/16/14	BTO
1	REVISED PER TOWN OF PITTSBORO 1ST COMMENTS	5/21/14	WJB

Kimley»Horn

© 2014 KIMLEY-HORN AND ASSOCIATES, INC.

333 FAYETTEVILLE STREET, SUITE 600, RALEIGH, NC 27601
PHONE: 919-835-1494 FAX: 919-653-5847
WWW.KIMLEY-HORN.COM

KHA PROJECT	012325022
DATE	01/28/2014
SCALE	AS SHOWN
DESIGNED BY	BTO
DRAWN BY	KCG
CHECKED BY	WJB

CHATHAM MEDICAL OFFICE BUILDING

PREPARED FOR

CHATHAM PARK INVESTORES LLC

PITTSBORO NC

NORTH CAROLINA PROFESSIONAL SEAL 039196 ENGINEER JORDAN BREWER
7/16/14

LEGEND AND GENERAL NOTES

SHEET NUMBER

C-001

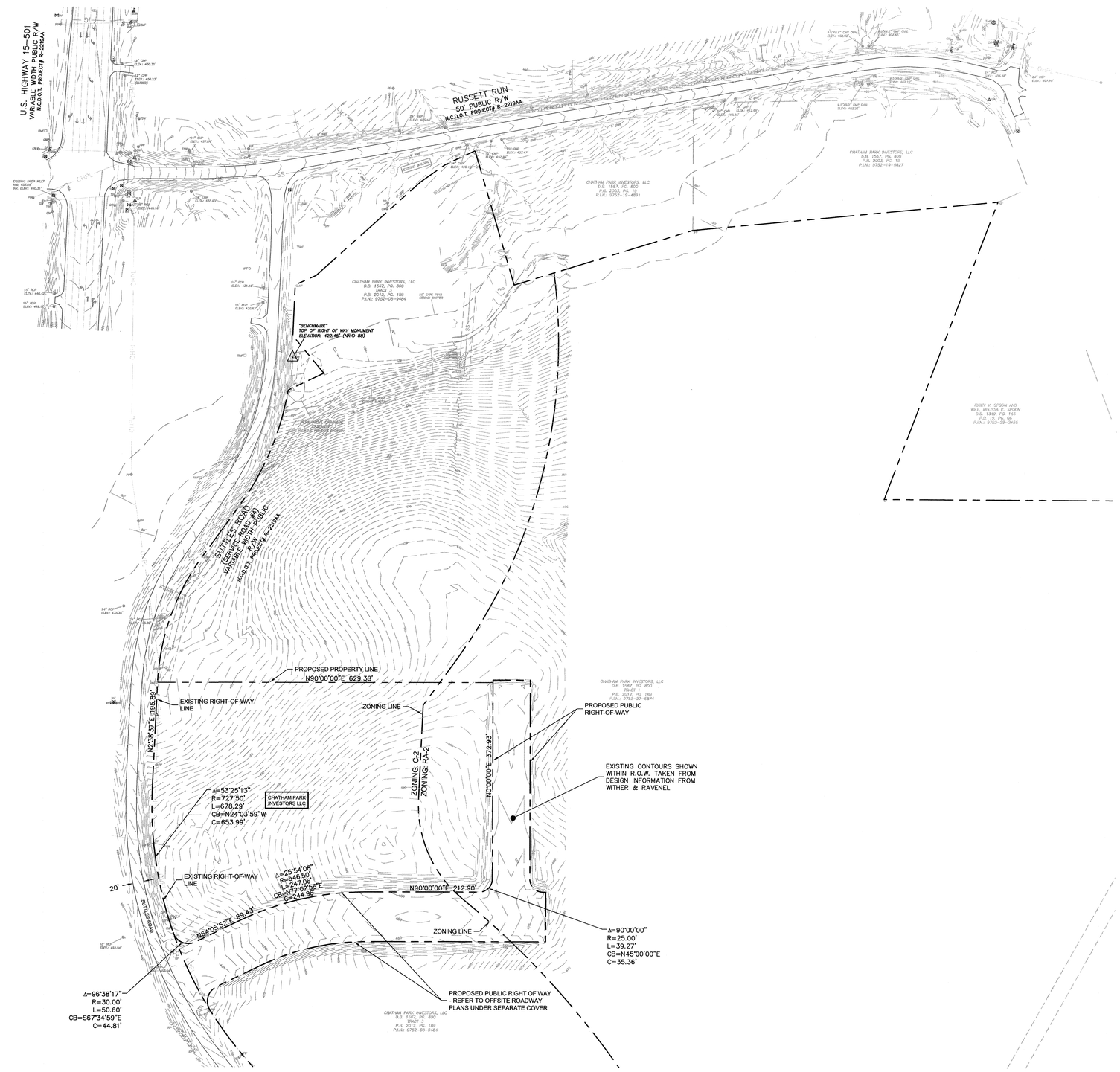

LEGEND:

CATCH BASIN	CB
EXISTING IRON PIPE	EIP
WATER METER	WM
EDGE OF PAVEMENT	EOP
CURB & GUTTER	CG
CATCH BASIN	CB
SEWER MANHOLE	
WATER MANHOLE	W
UTILITY POLE	
TREE	1928
LEFT TURN ARROW	
BENCHMARK	

LINETYPE LEGEND:

ADJOINER	
BOUNDARY	
EASEMENT	
STORM DRAINAGE	
SANITARY SEWER	SS
CURB AND GUTTER	
OVERHEAD ELECTRIC	OHE

NOTES:

1. AREAS COMPUTED BY COORDINATE METHOD.
2. BASIS OF BEARING NC GRID NAD 83 (2007).
3. THIS PROPERTY IS NOT LOCATED IN A FLOOD AREA PER FIRM COMMUNITY PANEL NUMBER MAP #3720074700J, PANEL 0747J, AS LAST PUBLISHED AND REVISED 05/02/2006.
4. ALL DISTANCES ARE HORIZONTAL GROUND DISTANCES.
5. NO EASEMENT INFORMATION WAS FOUND FOR THE SANITARY SEWER LINE SHOWN HEREON.
6. THIS SURVEY WAS PREPARED WITHOUT THE BENEFIT OF A TITLE REPORT AND MAY BE SUBJECT TO ANY MATTERS THAT A FULL TITLE SEARCH WOULD DISCLOSE.
7. A PORTION OF DURHAM COUNTY PARCEL NUMBERS (PIN) #0747.03-32-7660, 0747.03-32-8254, 0747.03-32-9027, AND 0747.03-31-9963.
8. VERTICAL DATUM IS NAVD 88.

ALL CONSTRUCTION TO BE IN ACCORDANCE WITH ALL TOWN OF PITTSBORO AND/OR NCDOT STANDARDS AND SPECIFICATIONS.

SURVEY NOTE:

ALL EXISTING SITE AND TOPOGRAPHIC INFORMATION SHOWN BASED ON AN ALTA/ACSM LAND TITLE SURVEY DATED FEBRUARY 15, 2013. PROVIDED BY WHITHERS & RAVENEL. 115 MACKENAN DR, CARY NC 27511. PHONE 919-469-3340

GRAPHIC SCALE IN FEET
0 50 100 200
SCALE 1" = 100 FT

NORTH

No.	REVISIONS	DATE	BY
2	REVISED PER TOWN OF PITTSBORO 2ND COMMENTS	7/16/14	BTO
1	REVISED PER TOWN OF PITTSBORO 1ST COMMENTS	5/21/14	WJB

Kimley»Horn

© 2014 KIMLEY-HORN AND ASSOCIATES, INC.

333 FAYETTEVILLE STREET, SUITE 600, RALEIGH, NC 27601
PHONE: 919-835-1494 FAX: 919-653-5847
WWW.KIMLEY-HORN.COM

KHA PROJECT 012325022
DATE 01/28/2014
SCALE AS SHOWN
DESIGNED BY BTO
DRAWN BY KCG
CHECKED BY WJB

CHATHAM MEDICAL OFFICE BUILDING

PREPARED FOR

CHATHAM PARK INVESTORES LLC

PITTSBORO NC

NORTH CAROLINA PROFESSIONAL SEAL 039196 ENGINEER W. JORDAN BREWER
7/16/14

EXISTING CONDITIONS

SHEET NUMBER

C-100

Plotted By:Brewer, Jordan Sheet Set:Chatham Medical Office Building Layout:C-100 EXISTING CONDITIONS July 15, 2014 07:31:37am K:\RDT_LDEV\012325022_chatham_mob\planning phase\15_cad files\plansheets\C-100 EXISTING CONDITIONS.dwg
This document, together with the concepts and designs presented herein, as an instrument of service, is intended only for the specific purpose and client for which it was prepared. Reuse of and improper reliance on this document without written authorization and adaptation by Kimley-Horn and Associates, Inc. shall be without liability to Kimley-Horn and Associates, Inc.

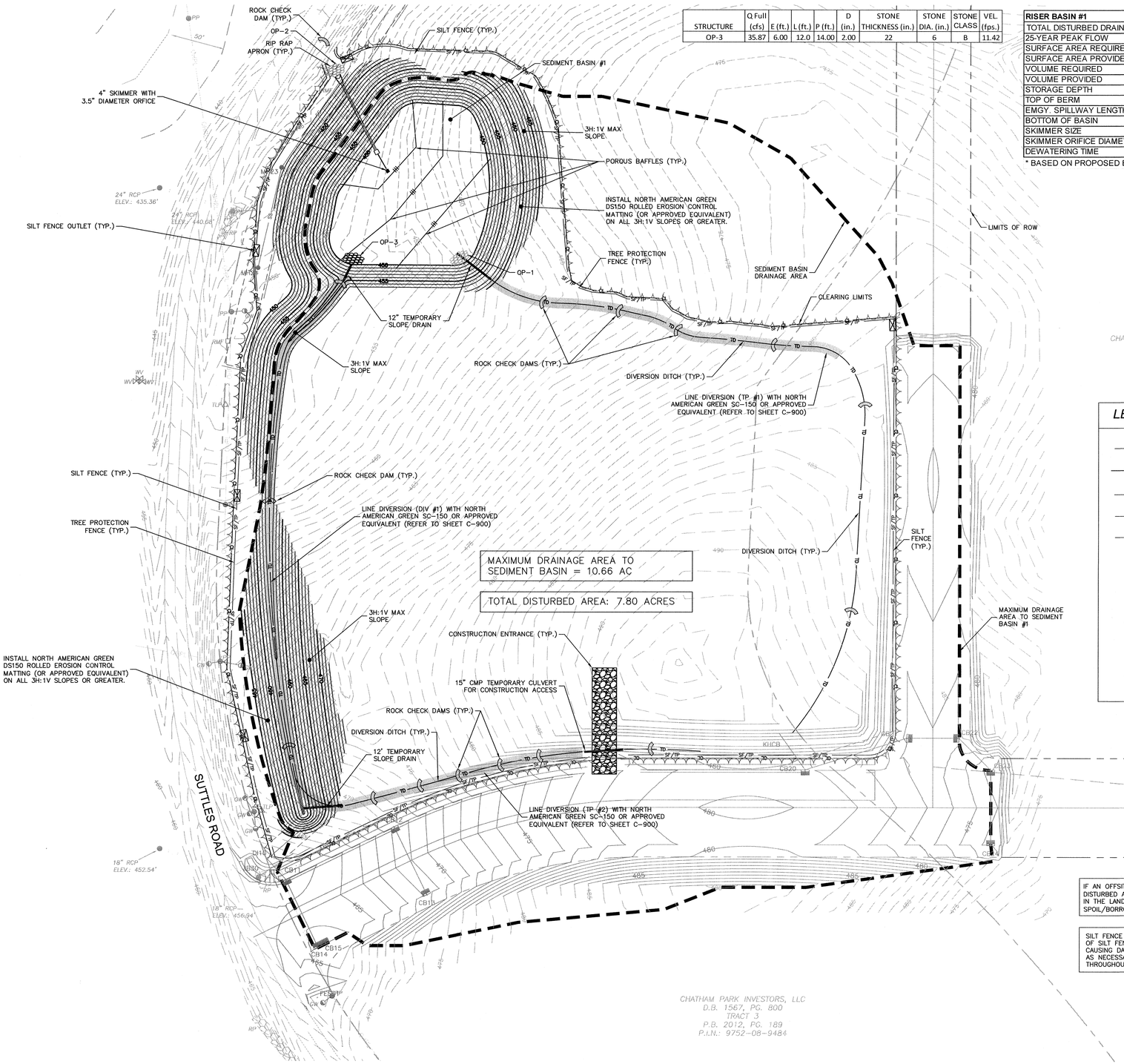

STRUCTURE	Q Full (cfs)	E (ft.)	L (ft.)	P (ft.)	D (in.)	STONE THICKNESS (in.)	STONE DIA. (in.)	STONE CLASS	VEL. (fps.)
OP-3	35.87	6.00	12.0	14.00	2.00	22	6	B	11.42

RISER BASIN #1					
TOTAL DISTURBED DRAINAGE AREA	10.660		AC		
25-YEAR PEAK FLOW	35.26328		CFS		
SURFACE AREA REQUIRED	15,340		SF		
SURFACE AREA PROVIDED	25,188	*	SF		
VOLUME REQUIRED	19,188		CF		
VOLUME PROVIDED	80,312	*	CF		
STORAGE DEPTH	3.75	*	FT		
TOP OF BERM	30,029	*	SF	457.00	ELEV
EMGY. SPILLWAY LENGTH	16		FT	453.75	ELEV
BOTTOM OF BASIN	18,230	*	SF	450.00	ELEV
SKIMMER SIZE	4		IN		
SKIMMER ORIFICE DIAMETER	3.5		IN		
DEWATERING TIME	4.92		DAYS		

* BASED ON PROPOSED BIORETENTION POND SIZE

CONSTRUCTION SEQUENCE:

1.) INSTALL TREE PROTECTION FENCING IN ACCORDANCE WITH THE APPROVED SITE PLAN.

2.) SCHEDULE AND HOLD A PRE-CONSTRUCTION CONFERENCE PRIOR TO BEGINNING ANY LAND-DISTURBING ACTIVITIES. THIS CONFERENCE SHOULD BE ATTENDED BY A REPRESENTATIVE OF THE FINANCIALLY RESPONSIBLE PARTY AND/OR THE GENERAL CONTRACTOR, GRADING SUB-CONTRACTOR, EROSION CONTROL SUB-CONTRACTOR AND THE NCDENR EROSION CONTROL INSPECTOR.

3.) OBTAIN LAND DISTURBING PERMIT AND PLACARD, AND POST THE PLACARD ON SITE.

4.) OBTAIN AN APPROVED (STAMPED) SEDIMENT & EROSION CONTROL PLAN AND KEEP IT ON SITE, EITHER IN THE INSPECTION BOX, CONSTRUCTION OFFICE OR WITH THE CONTRACTOR.

5.) INSTALL CONSTRUCTION ENTRANCE/EXIT, SILT FENCING, DIVERSION DITCHES, SEDIMENT BASINS, AND OTHER INITIAL EROSION CONTROL MEASURES AS SPECIFIED IN THE PLAN. STABILIZE BASINS AND DIVERSIONS IMMEDIATELY UPON CONSTRUCTION.

6.) NOTIFY THE NCDENR EROSION CONTROL INSPECTOR & ENGINEER AFTER MEASURES HAVE BEEN INSTALLED AND PROJECT HAS STARTED.

7.) BEGIN CLEARING AND GRADING OF THE SITE ACCORDING TO THE APPROVED SEDIMENT & EROSION CONTROL PLAN, MAINTAINING EROSION CONTROL MEASURES AS NECESSARY. EROSION CONTROL MEASURES SHALL BE RESTORED TO ORIGINAL DIMENSIONS WHEN SEDIMENT ACCUMULATES TO 50% OF DESIGN DEPTH.

8.) PROVIDE ALL DISTURBED AREAS WITH GROUND COVER AFTER COMPLETION OF ANY PHASE OF CLEARING, GRUBBING OR GRADING.

9.) INSTALL THE REMAINING PROPOSED STORM DRAINAGE SYSTEM AND OTHER UNDERGROUND UTILITIES, INLET PROTECTION, AND SUB-BASE FOR THE PARKING AREA AND DRIVE AISLES.

10.) USE PIPE INLET PROTECTION ON ANY OPEN TRENCHES AT DAYS/WEEK END IN ORDER TO PREVENT OFFSITE SEDIMENTATION.

11.) INSPECT SITE ONCE A WEEK AND AFTER EVERY RAINFALL EVENT.

12.) CONTRACTOR SHALL INSPECT ALL EROSION AND SEDIMENT CONTROL DEVICES EVERY SEVEN (7) CALENDAR DAYS AND AFTER EVERY RAINFALL EVENT. DAMAGED OR INEFFECTIVE DEVICES SHALL BE REPLACED IMMEDIATELY.

13.) COORDINATE WITH THE ENGINEER & NCDENR SEDIMENT & EROSION CONTROL OFFICE PRIOR TO THE REMOVAL OF ANY EROSION CONTROL MEASURE. ALL RIP RAP SHALL BE REPLENISHED AS NECESSARY AND FREE OF SEDIMENT.

14.) AT THE CONCLUSION OF BUILDING OR IF LAND-DISTURBING ACTIVITY IS STOPPED, TEMPORARY OR PERMANENT VEGETATIVE COVER SHALL BE INSTALLED.

15.) WHEN CONSTRUCTION IS COMPLETE AND ALL AREAS ARE STABILIZED COMPLETELY, CALL THE ENGINEER & NCDENR EROSION CONTROL INSPECTOR FOR INSPECTION.

16.) DIG SEDIMENT WITHIN RISER BASIN OUT AND INSTALL BIORETENTION MEDIA AS SHOWN ON DETAILS.

17.) IF THE SITE IS APPROVED, REMOVE ALL TEMPORARY EROSION CONTROL DEVICES. SEED OUT OR STABILIZE ANY RESULTING BARE AREAS WITH PERMANENT VEGETATION.

LEGEND

- SF/TP — SILT FENCE AND TREE PROTECTION FENCE
- TPF — TREE PROTECTION FENCE
- TD — DIVERSION DITCH
- CL — CLEARING LIMITS
- POROUS BAFFLES
- CONSTRUCTION ENTRANCE
- SILT FENCE OUTLET
- ROCK CHECK DAM
- ROLLED EROSION CONTROL MATTING (SEE DETAIL SHEET C-900)
- ROLLED EROSION CONTROL MATTING (SEE DETAIL SHEET C-900)

GENERAL EROSION AND SEDIMENT CONTROL NOTES :

1. REFER TO EXISTING CONDITIONS PLAN.
2. EXCAVATION AND EARTH MOVING OPERATIONS SHALL BE CONDUCTED UNDER THE SUPERVISION OF THE OWNERS GEOTECHNICAL ENGINEER.
3. ALL CONSTRUCTION SHALL COMPLY WITH NCDENR STANDARDS AND SPECIFICATIONS.
4. FOOTING EXCAVATION SHALL BE CONTINUOUSLY DEWATERED THROUGH SEDIMENT BAG OR DIRECTED INTO SEDIMENT BASIN TO PREVENT SETTLEMENT AND SEDIMENT DEPOSITION. ENSURE THAT THE BUILDING PAD IS CONSTRUCTED WITH SUITABLE MATERIAL AS PER THE GEOTECHNICAL ENGINEERS DIRECTION.
5. VERIFY THE LOCATION OF ALL EXISTING UTILITIES PRIOR TO CONSTRUCTION. EXISTING UTILITIES SHOWN ARE FROM THE BEST AVAILABLE RECORDS AND FROM A SURVEY OF ABOVE GROUND FEATURES. NO WARRANTY IS GIVEN OR IMPLIED AS TO THE ACCURACY OF THE INFORMATION. ALL EXISTING UTILITIES SHOULD BE CONSIDERED APPROXIMATE IN LOCATION AND VERIFIED PRIOR TO COMMENCING ACTIVITY ON SITE.
6. STABILIZE DISTURBED AREAS WITH TEMPORARY VEGETATION. DENUDED AREAS MUST BE SEEDED WITH FOURTEEN (14) DAYS OF COMPLETION OF ANY PHASE OF CONSTRUCTION.
7. ENSURE THAT ALL TEMPORARY DIVERSIONS ARE INSTALLED WITH POSITIVE DRAINAGE AND SHALL OPPOSE EXISTING GRADE WHEN NECESSARY TO PROVIDE A MINIMUM OF 0.5% LONGITUDINAL SLOPE.
8. ALL ADJACENT ROADS TO THE SITE ARE TO BE SWEPT AND WASHED AT THE END OF EACH WORK DAY TO ENSURE NO SEDIMENT COLLECTS ON THE ROADWAYS.
9. INSPECT AND PROPERLY MAINTAIN ALL EROSION AND SEDIMENT CONTROL MEASURES WEEKLY AND AFTER EVERY RAINFALL EVENT.
10. INSTALL ANY ADDITIONAL EROSION CONTROL MEASURES AS NECESSARY TO PREVENT SEDIMENT RUNOFF.

IF AN OFFSITE SOIL SPOIL OR BORROW SITE IS UTILIZED, THEN THE DISTURBED AREA FOR THE SPOIL/BORROW SITE MUST BE INCLUDED IN THE LAND-DISTURBANCE PLAN AND PERMIT UNLESS THE SPOIL/BORROW SITE ALREADY HAS A LAND-DISTURBANCE PERMIT.

SILT FENCE OUTLETS ARE TO BE PROVIDED ALONG ALL LOW POINTS OF SILT FENCE AND AREAS WHERE RUNOFF MAY CONCENTRATE CAUSING DAMAGE TO SILT FENCE. CONTRACTOR TO INSTALL OUTLETS AS NECESSARY TO ENSURE SILT FENCE IS FULLY FUNCTIONAL THROUGHOUT THE DURATION OF CONSTRUCTION .

ALL CONSTRUCTION TO BE IN ACCORDANCE WITH ALL TOWN OF PITTSBORO AND/OR NCDOT STANDARDS AND SPECIFICATIONS.

SURVEY NOTE:

ALL EXISTING SITE AND TOPOGRAPHIC INFORMATION SHOWN BASED ON AN ALTA/ACSM LAND TITLE SURVEY DATED FEBRUARY 15, 2013. PROVIDED BY WHITHERS & RAVENEL. 115 MACKENAN DR, CARY NC 27511. PHONE 919-469-3340

GRAPHIC SCALE IN FEET
0 25 50 100
SCALE 1" = 50 FT

NORTH

No.	REVISIONS	DATE	BY
3	NCDENR EXPRESS REVIEW COMMENTS	7/18/14	KCG
2	REVISED PER TOWN OF PITTSBORO 2ND COMMENTS	7/16/14	BTO
1	REVISED PER TOWN OF PITTSBORO 1ST COMMENTS	5/21/14	WJB

Kimley»Horn

© 2014 KIMLEY-HORN AND ASSOCIATES, INC.

333 FAYETTEVILLE STREET, SUITE 600, RALEIGH, NC 27601
PHONE: 919-835-1494 FAX: 919-653-5847
WWW.KIMLEY-HORN.COM

KHA PROJECT 012325022
DATE 01/28/2014
SCALE AS SHOWN
DESIGNED BY BTO
DRAWN BY KCG
CHECKED BY WJB

CHATHAM MEDICAL OFFICE BUILDING

PREPARED FOR

CHATHAM PARK INVESTORES LLC

PITTSBORO NC

NORTH CAROLINA PROFESSIONAL SEAL 039196 ENGINEER W. JORDAN BREWER
7/18/14

PHASE 1 EROSION CONTROL PLAN

SHEET NUMBER

C-200

Plotted By:Gardner, Cindy Sheet Set:Chatham Medical Office Building Layout:C-200 PHASE 1 EROSION CONTROL PLAN July 18, 2014 11:09:41am K:\CLT_LDEV\012325022_chatham med\planning phase\15 cad files\plans\sheets\C-200 PHASE 1 EROSION CONTROL PLAN.dwg
This document, together with the concepts and designs presented herein, as an instrument of service, is intended only for the specific purpose and client for which it was prepared. Reuse of and improper reliance on this document without written authorization and adaptation by Kimley-Horn and Associates, Inc. shall be without liability to Kimley-Horn and Associates, Inc.

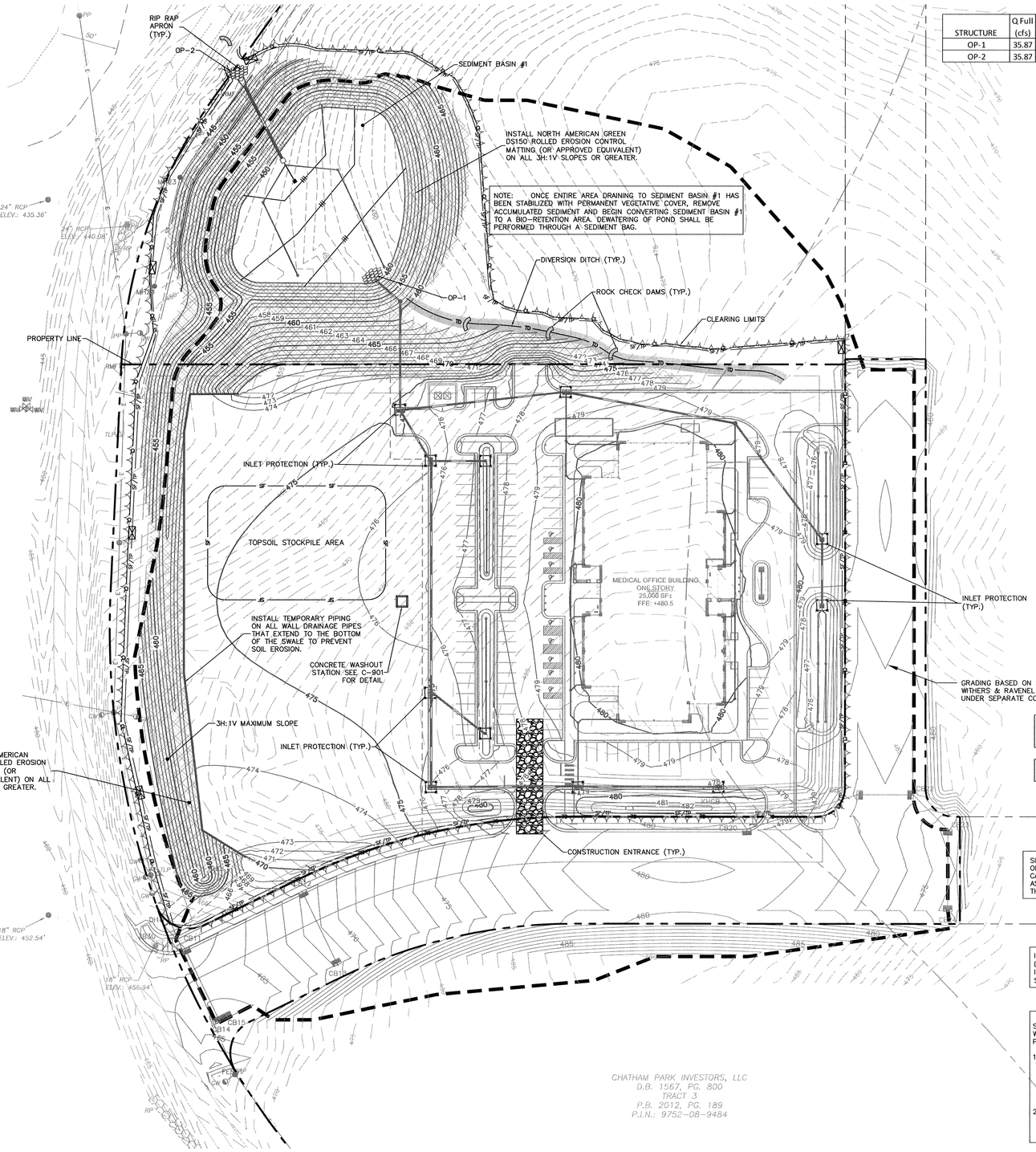

STRUCTURE	Q Full (cfs)	E (ft.)	L (ft.)	P (ft.)	D (in.)	STONE THICKNESS (in.)	STONE DIA. (in.)	STONE CLASS	VEL. (fps.)
OP-1	35.87	6.00	12.0	14.00	2.00	22	6	B	11.42
OP-2	35.87	6.00	12.0	14.00	2.00	22	6	B	11.42

LEGEND

- INLET PROTECTION
- SF/TP — SILT FENCE AND TREE PROTECTION FENCE
- TPF — TREE PROTECTION FENCE
- TD — DIVERSION DITCH
- CL — CLEARING LIMITS
- CONSTRUCTION ENTRANCE
- SILT FENCE OUTLET
- ROCK CHECK DAM
- ROLLED EROSION CONTROL MATTING (SEE DETAIL SHEET C-900)
- ROLLED EROSION CONTROL MATTING (SEE DETAIL SHEET C-900)

MAXIMUM DRAINAGE AREA TO SEDIMENT BASIN = 10.66 AC

TOTAL DISTURBED AREA: 7.80 ACRES

SILT FENCE OUTLETS ARE TO BE PROVIDED ALONG ALL LOW POINTS OF SILT FENCE AND AREAS WHERE RUNOFF MAY CONCENTRATE CAUSING DAMAGE TO SILT FENCE. CONTRACTOR TO INSTALL OUTLETS AS NECESSARY TO ENSURE SILT FENCE IS FULLY FUNCTIONAL THROUGHOUT THE DURATION OF CONSTRUCTION .

IF AN OFFSITE SOIL SPOIL OR BORROW SITE IS UTILIZED, THEN THE DISTURBED AREA FOR THE SPOIL/BORROW SITE MUST BE INCLUDED IN THE LAND-DISTURBANCE PLAN AND PERMIT UNLESS THE SPOIL/BORROW SITE ALREADY HAS A LAND-DISTURBANCE PERMIT.

SOIL STABILIZATION SHALL BE ACHIEVED ON ANY AREA OF A SITE WHERE LAND-DISTURBING ACTIVITIES HAVE TEMPORARILY OR PERMANENTLY CEASED ACCORDING TO THE FOLLOWING SCHEDULE:

1. ALL PERIMETER DIKES, SWALES, DITCHES, PERIMETER SLOPES AND ALL SLOPES STEEPER THAN 3 HORIZONTAL TO 1 VERTICAL (3:1) SHALL BE PROVIDED TEMPORARY OR PERMANENT STABILIZATION WITH GROUND COVER AS SOON AS PRACTICABLE BUT IN ANY EVENT WITHIN 7 CALENDAR DAYS FROM THE LAST LAND-DISTURBING ACTIVITY.
2. ALL OTHER DISTURBED AREAS SHALL BE PROVIDED TEMPORARY OR PERMANENT STABILIZATION WITH GROUND COVER AS SOON AS PRACTICABLE BUT IN ANY EVENT WITHIN 14 CALENDAR DAYS FROM THE LAST LAND-DISTURBING ACTIVITY.

MAINTENANCE NOTES:

IN GENERAL, ALL EROSION AND SEDIMENT CONTROL MEASURES WILL BE CHECKED AND MAINTAINED DAILY AND AFTER EACH RAINFALL GREATER THAN 0.5 INCHES. ANY SEDIMENT THAT HAS BEEN TRANSPORTED BEYOND THE PROJECT LIMITS SHALL BE REMOVED. THE FOLLOWING ITEMS WILL BE CHECKED IN PARTICULAR:

CONSTRUCTION ENTRANCE:

INSPECT CONSTRUCTION ROADS AND PARKING AREAS PERIODICALLY FOR CONDITION OF SURFACE. TOP DRESS WITH NEW GRAVEL AS NEEDED. CHECK ROAD DITCHES AND OTHER SEEDED AREAS FOR EROSION AND SEDIMENTATION AFTER RUNOFF-PRODUCING RAINS. MAINTAIN ALL VEGETATION IN A HEALTHY, VIGOROUS CONDITION. SEDIMENT PRODUCING AREAS SHOULD BE TREATED IMMEDIATELY.

SILT FENCE:

INSPECT SEDIMENT FENCES AT LEAST ONCE A WEEK AND AFTER EACH RAINFALL. MAKE ANY REQUIRED REPAIRS IMMEDIATELY. SHOULD THE FABRIC OF A SEDIMENT FENCE COLLAPSE, TEAR, DECOMPOSE, OR BECOME INEFFECTIVE, REPLACE IT IMMEDIATELY. REMOVE SEDIMENT DEPOSITS AS NECESSARY TO PROVIDE ADEQUATE STORAGE VOLUME FOR THE NEXT RAIN AND TO REDUCE PRESSURE ON THE FENCE. TAKE CARE TO AVOID UNDERMINING THE FENCE DURING CLEANOUT. REMOVE ALL FENCING MATERIALS AND UNSTABLE SEDIMENT DEPOSITS AND BRING THE AREA TO GRADE AND STABILIZE IT AFTER THE CONTRIBUTING DRAINAGE AREA HAS BEEN PROPERLY STABILIZED.

SILT FENCE GRAVEL OUTLET:

INSPECT SEDIMENT FENCE GRAVEL OUTLETS AT LEAST ONCE A WEEK AND AFTER EACH RAINFALL. MAKE ANY REQUIRED REPAIRS IMMEDIATELY. REMOVE SEDIMENT DEPOSITS AS NECESSARY TO PROVIDE ADEQUATE STORAGE VOLUME FOR THE NEXT RAIN. ANY RIP RAP DISPLACED MUST BE REPLACED IMMEDIATELY.

OUTLET STABILIZATION STRUCTURE:

INSPECT RIP RAP STRUCTURES WEEKLY AND AFTER SIGNIFICANT (0.5 INCH OR GREATER) RAINFALL EVENTS TO SEE IF ANY EROSION AROUND OR BELOW THE RIP RAP HAS TAKEN PLACE, OR IF STONES HAVE BEEN DISLODGED. IMMEDIATELY MAKE ALL NEEDED REPAIRS TO PREVENT FURTHER DAMAGE.

BLOCK AND GRAVEL INLET PROTECTION:

INSPECT THE BARRIER OF AFTER EACH RAIN AND MAKE REPAIRS AS NEEDED. REMOVE SEDIMENT AS NECESSARY TO PROVIDE ADEQUATE STORAGE VOLUME FOR SUBSEQUENT RAINS. WHEN THE CONTRIBUTING DRAINAGE AREA HAS BEEN ADEQUATELY STABILIZED, REMOVE ALL MATERIALS AND ANY UNSTABLE SOIL, AND EITHER SALVAGE OR DISPOSE OF IT PROPERLY. BRING THE DISTURBED AREA TO PROPER GRADE, THEN SMOOTH AND COMPACT IT. APPROPRIATELY STABILIZE ALL BARE AREAS AROUND THE INLET.

GENERAL EROSION AND SEDIMENT CONTROL NOTES :

1. *REFER TO EXISTING CONDITIONS PLAN.*
2. *EXCAVATION AND EARTH MOVING OPERATIONS SHALL BE CONDUCTED UNDER THE SUPERVISION OF THE OWNERS GEOTECHNICAL ENGINEER.*
3. *ALL CONSTRUCTION SHALL COMPLY WITH NCDENR STANDARDS AND SPECIFICATIONS.*
4. *FOOTING EXCAVATION SHALL BE CONTINUOUSLY DEWATERED TO PREVENT SETTLEMENT AND SEDIMENT DEPOSITION. ENSURE THAT THE BUILDING PAD IS CONSTRUCTED WITH SUITABLE MATERIAL AS PER THE GEOTECHNICAL ENGINEERS DIRECTION.*
5. *VERIFY THE LOCATION OF ALL EXISTING UTILITIES PRIOR TO CONSTRUCTION. EXISTING UTILITIES SHOWN ARE FROM THE BEST AVAILABLE RECORDS AND FROM A SURVEY OF ABOVE GROUND FEATURES. NO WARRANTY IS GIVEN OR IMPLIED AS TO THE ACCURACY OF THE INFORMATION. ALL EXISTING UTILITIES SHOULD BE CONSIDERED APPROXIMATE IN LOCATION AND VERIFIED PRIOR TO COMMENCING ACTIVITY ON SITE.*
6. *STABILIZE DISTURBED AREAS WITH TEMPORARY VEGETATION. DENUDED AREAS MUST BE SEEDED WITH FOURTEEN (14) DAYS OF COMPLETION OF ANY PHASE OF CONSTRUCTION.*
7. *ENSURE THAT ALL TEMPORARY DIVERSIONS ARE INSTALLED WITH POSITIVE DRAINAGE AND SHALL OPPOSE EXISTING GRADE WHEN NECESSARY TO PROVIDE A MINIMUM OF 0.5% LONGITUDINAL SLOPE.*
8. *ALL ADJACENT ROADS TO THE SITE ARE TO BE SWEPT AND WASHED AT THE END OF EACH WORK DAY TO ENSURE NO SEDIMENT COLLECTS ON THE ROADWAYS.*
9. *INSPECT AND PROPERLY MAINTAIN ALL EROSION AND SEDIMENT CONTROL MEASURES WEEKLY AND AFTER EVERY RAINFALL EVENT.*
10. *INSTALL ANY ADDITIONAL EROSION CONTROL MEASURES AS NECESSARY TO PREVENT SEDIMENT RUNOFF.*

EROSION CONTROL PHASE II CONSTRUCTION SEQUENCE :

1. DO NOT BEGIN PHASE 2 CONSTRUCTION UNTIL PHASE 1 HAS BEEN APPROVED BY ENGINEER AND NCDENR.
2. BEGIN INSTALLATION OF UTILITIES, INCLUDING STORMWATER PIPING, WATER, SEWER, AND OTHER UTILITY LINES. INSTALL INLET PROTECTION ON STORM SEWER.
3. COMPLETE UTILITY INSTALLATION AND SOILS COMPACTION.
4. INSTALL CURB AND GUTTER AND BASE STONE. PAVE SITE.
5. PLACE TOPSOIL AND PROVIDE PERMANENT SEEDING AS INDICATED IN THE SEEDING SPECIFICATIONS.
6. ONCE ALL AREAS HAVE BEEN STABILIZED, CONTACT OWNER'S ENGINEER AND NCDENR FOR SITE CLOSEOUT INSPECTION.
7. AFTER APPROVAL FROM THE ENGINEER AND NCDENR EROSION CONTROL INSPECTOR, REMOVE ALL REMAINING EROSION CONTROL MEASURES AND STABILIZE ANY REMAINING DISTURBED AREAS. DO NOT REMOVE ANY EROSION CONTROL MEASURES WITHOUT APPROVAL OF THE ENGINEER AND INSPECTOR.

ALL CONSTRUCTION TO BE IN ACCORDANCE WITH ALL TOWN OF PITTSBORO AND/OR NCDOT STANDARDS AND SPECIFICATIONS.

SURVEY NOTE:

ALL EXISTING SITE AND TOPOGRAPHIC INFORMATION SHOWN BASED ON AN ALTA/ACSM LAND TITLE SURVEY DATED FEBRUARY 15, 2013. PROVIDED BY WHITHERS & RAVENEL. 115 MACKENAN DR, CARY NC 27511. PHONE 919-469-3340

GRAPHIC SCALE IN FEET
0 25 50 100
SCALE 1" = 50 FT

NORTH

No.	REVISIONS	DATE	BY
3	NCDENR EXPRESS REVIEW COMMENTS	7/18/14	KCG
2	REVISED PER TOWN OF PITTSBORO 2ND COMMENTS	7/16/14	BTO
1	REVISED PER TOWN OF PITTSBORO 1ST COMMENTS	5/21/14	WJB

Kimley»Horn

© 2014 KIMLEY-HORN AND ASSOCIATES, INC.

333 FAYETTEVILLE STREET, SUITE 600, RALEIGH, NC 27601
PHONE: 919-835-1494 FAX: 919-653-5847
WWW.KIMLEY-HORN.COM

KHA PROJECT 012325022
DATE 01/28/2014
SCALE AS SHOWN
DESIGNED BY BTO
DRAWN BY KCG
CHECKED BY WJB

CHATHAM MEDICAL OFFICE BUILDING

PREPARED FOR

CHATHAM PARK INVESTORES LLC

PITTSBORO NC

NORTH CAROLINA PROFESSIONAL ENGINEER SEAL 039196 W. JORDAN BREWER 7/18/14

PHASE 2 EROSION CONTROL PLAN

SHEET NUMBER

C-201

Plotted By: Greenwort, Craig Sheet Set:Chatham Medical Office Building Layout:C-201 PHASE 2 EROSION CONTROL PLAN July 18, 2014 11:16:08am K:\RDT_LDEV\012325022_chatham_mob\planning phase\15_cad files\plansheets\C-201 PHASE 2 EROSION CONTROL PLAN.dwg
This document, together with the concepts and designs presented herein, as an instrument of service, is intended only for the specific purpose and client for which it was prepared. Reuse of and improper reliance on this document without written authorization and adaptation by Kimley-Horn and Associates, Inc. shall be without liability to Kimley-Horn and Associates, Inc.

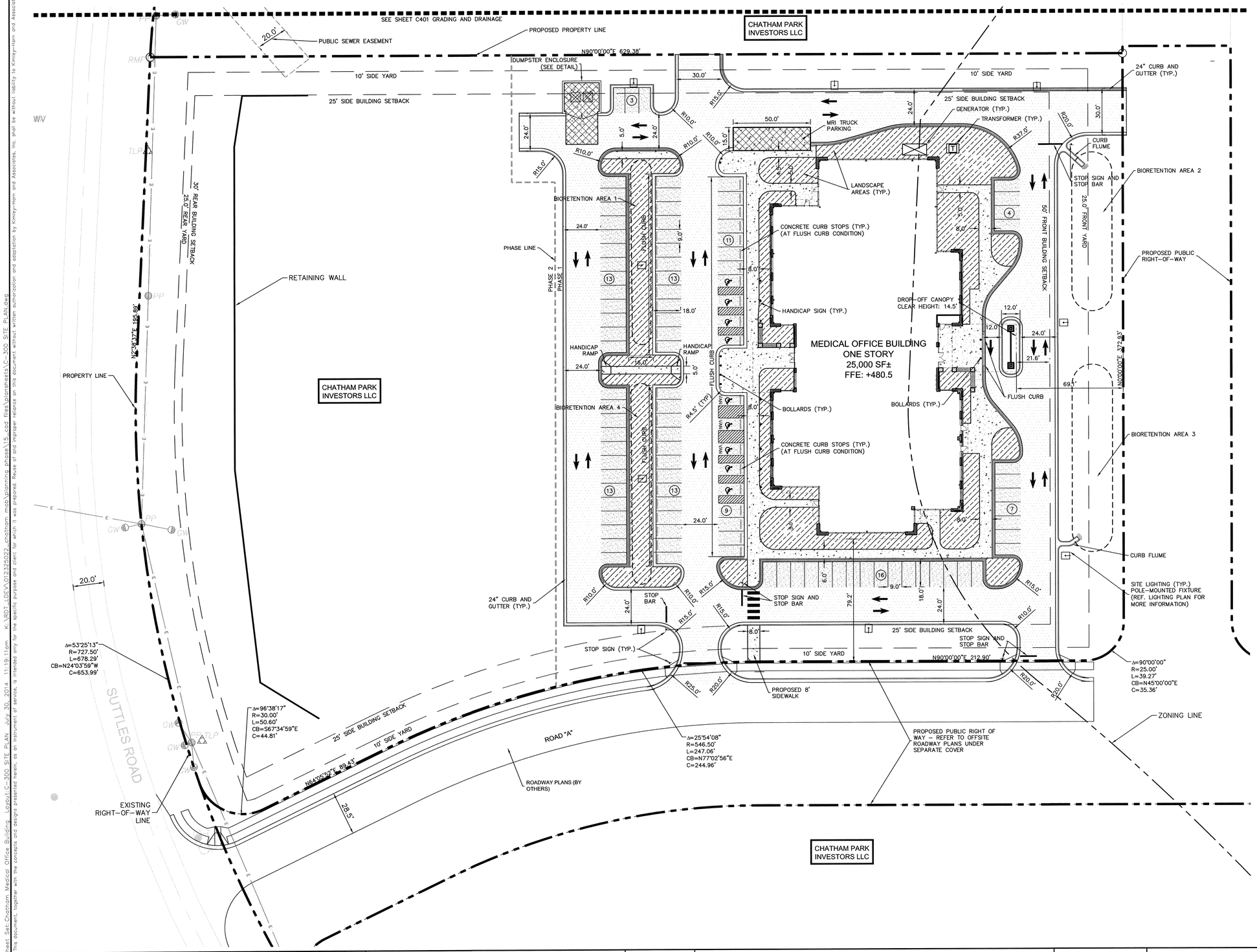

LEGEND

- PAINTED TRAFFIC ARROW
- CONCRETE SIDEWALK
- HEAVY DUTY CONCRETE
- LANDSCAPE AREA
- (#) PROPOSED PARKING COUNT
- REGULAR DUTY PAVEMENT
- HEAVY DUTY PAVEMENT
- SPILLING CURB AND GUTTER

SITE PLAN NOTES:

1.) SIGNAGE IS NOT INCLUDED WITHIN THIS SITE PACKAGE AND MAY BE SUBMITTED AND PERMITTED SEPARATELY UNDER SEPARATE COVER.

2.) ROADWAY SIGNAGE INFORMATION IS NOT INCLUDED IN THIS PACKAGE AND IS PROVIDED IN THE OFFSITE ROADWAY PACKAGE (UNDER SEPARATE COVER)

SITE DATA

PROPERTY INFORMATION		
EXISTING ZONING: C-2 COMMERCIAL		
EXISTING USE: VACANT		
TOTAL SITE AREA:	6.0 ACRES(261,000 SF)	
PROPERTY SETBACKS:	FRONT = 50' (EAST)	
	SIDE = 10' (NORTH)	
	SIDE = 20' (SOUTH-NEW ROADWAY)	
	REAR = 30' (SUTTLES R.O.W.)	
PROJECT DATA:		
PROPOSED USE:	MEDICAL OFFICE BUILDING	
PROJECT AREA (LIMITS OF WORK):	7.80 AC	
PROPOSED # OF BUILDINGS	1 (25,000 GSF)	
BUILDING LOT COVERAGE:	9.5% (25,000 SF/261,000 SF)	
VEHICULAR SURFACE AREA(NEW):	21.4% (55,945 SF/261,000 SF)	
PARKING: STANDARD	REQUIRED 100 SPCS	PROVIDED 102 SPCS
	1 SPACE/ 250 SF	
HANDICAP	4 SPACES	9 SPACES (3 VAN ACCESSIBLE SPACE & REGULAR HC SPACES)
OPEN SPACE:	N/A	
PROPOSED BUILDING HEIGHT:	31.7'	
SITE IMPERVIOUS AREA:	39.15% (102,172SF/261,000SF)	
PHASE 2 IMPERVIOUS:	30.85% (80,528SF/261,000SF)	
TOTAL SITE IMPERVIOUS:	70.00% (182,700SF/261,000SF)	

ALL CONSTRUCTION TO BE IN ACCORDANCE WITH ALL TOWN OF PITTSBORO AND/OR NCDOT STANDARDS AND SPECIFICATIONS.

SURVEY NOTE:

ALL EXISTING SITE AND TOPOGRAPHIC INFORMATION SHOWN BASED ON AN ALTA/ACSM LAND TITLE SURVEY DATED FEBRUARY 15, 2013. PROVIDED BY WHITHERS & RAVENEL. 115 MACKENAN DR, CARY NC 27511. PHONE 919-469-3340

GRAPHIC SCALE IN FEET
0 15 30 60
SCALE 1" = 30 FT

NORTH

No.	REVISIONS	DATE	BY
5	REVISED PER TOWN OF PITTSBORO 3RD COMMENTS	7/30/14	KCG
4	NCDENR EXPRESS REVIEW COMMENTS	7/25/14	KCG
3	NCDENR EXPRESS REVIEW COMMENTS	7/18/14	KCG
2	REVISED PER TOWN OF PITTSBORO 2ND COMMENTS	7/16/14	BTO
1	REVISED PER TOWN OF PITTSBORO 1ST COMMENTS	5/21/14	WJB

Kimley»Horn

© 2014 KIMLEY-HORN AND ASSOCIATES, INC.

333 FAYETTEVILLE STREET, SUITE 600, RALEIGH, NC 27601
PHONE: 919-835-1494 FAX: 919-653-5847
WWW.KIMLEY-HORN.COM

KHA PROJECT 012325022
DATE 01/28/2014
SCALE AS SHOWN
DESIGNED BY BTO
DRAWN BY KCG
CHECKED BY WJB

CHATHAM MEDICAL OFFICE BUILDING

PREPARED FOR

CHATHAM PARK INVESTORS LLC

PITTSBORO NC

NORTH CAROLINA PROFESSIONAL SEAL 039196 ENGINEER W. JORDAN BREWER
7/30/14

SITE PLAN

SHEET NUMBER C-300

This document, together with the concepts and designs presented herein, as an instrument of service, is intended only for the specific purpose and client for which it was prepared. Reuse of and improper reliance on this document without written authorization and adaptation by Kimley-Horn and Associates, Inc. shall be without liability to Kimley-Horn and Associates, Inc.
Plotted By: Gearhart, Craig Sheet Set: Chatham Medical Office Building Layout: C-300 SITE PLAN July 30, 2014 11:19:11am K:\RDT_LDEV\012325022_chatham mob\planning phase\15_cad files\plansheets\C-300 SITE PLAN.dwg

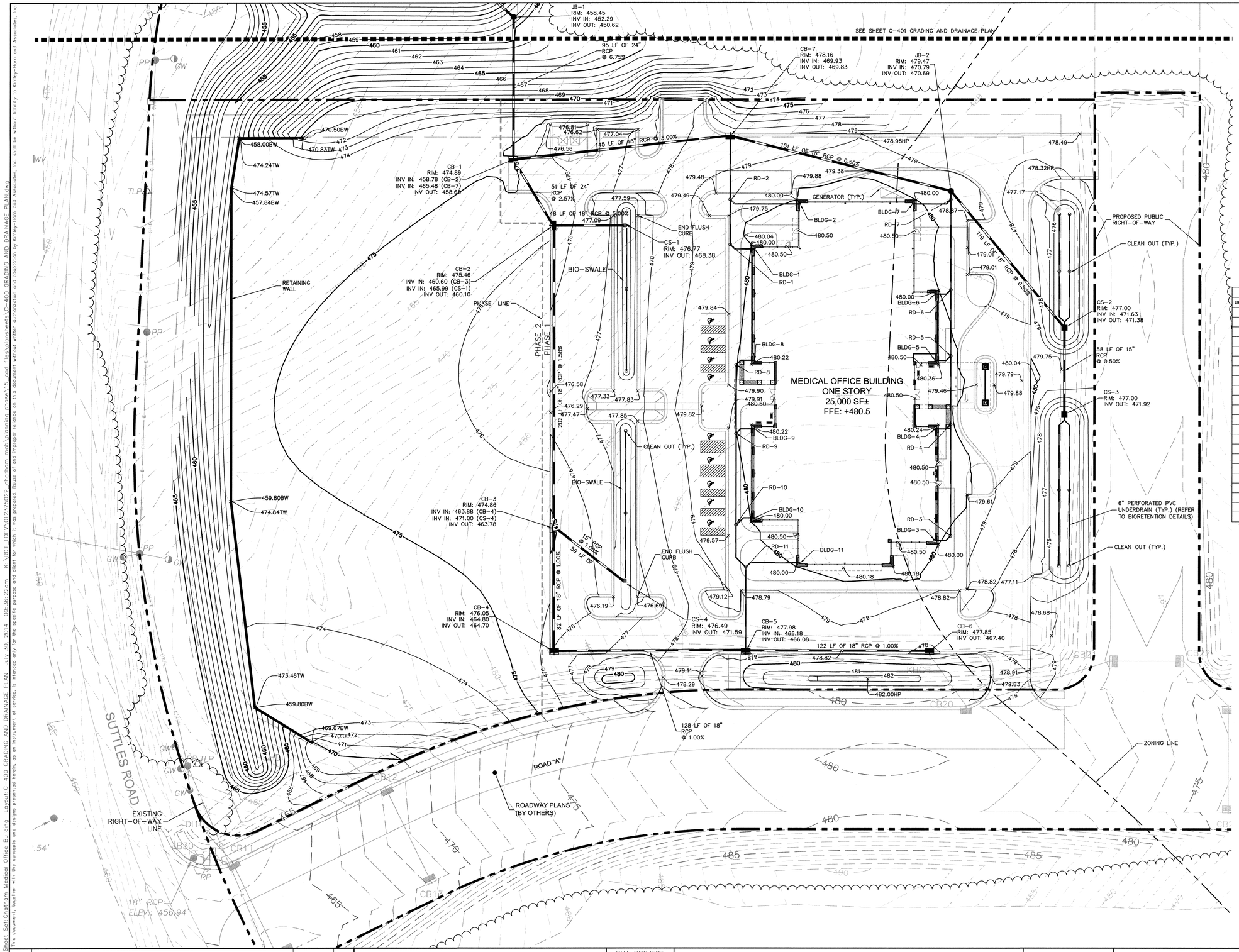

LEGEND

100	PROPOSED CONTOUR
100	EXISTING CONTOUR
+ 70.50	PROPOSED SPOT ELEVATION
	CATCH BASIN
	DROP INLET
	RCP PIPE
CL	LIMITS OF DISTURBANCE
/// TPF	SILT FENCE/TREE PROTECTION FENCE
CS	CONTROL STRUCTURE
CB	CATCH BASIN
HP	HIGH POINT
LP	LOW POINT
TC	TOP OF CURB
BC	BOTTOM OF CURB
HPS	HIGH POINT OF SWALE

Pipe Table

UP-STREAM STRUCTURE	DOWN STREAM STRUCTURE	UP-STREAM INV.	DOWN STREAM INV.	Size	MATERIAL	Length	Slope
BLDG-1	RD-1	477.67	477.25	8"	PVC	20 LF	2.08%
RD-1	RD-2	477.25	476.63	8"	PVC	30 LF	2.08%
RD-2	CB-7	476.63	475.76	8"	PVC	42 LF	2.08%
BLDG-2	RD-2	478.00	476.63	8"	PVC	66 LF	2.08%
BLDG-3	RD-3	478.00	477.77	8"	PVC	11 LF	2.08%
RD-3	RD-4	477.77	476.23	8"	PVC	74 LF	2.08%
RD-4	RD-5	476.23	475.29	8"	PVC	45 LF	2.08%
RD-5	RD-6	475.29	474.36	8"	PVC	45 LF	2.08%
RD-6	RD-7	474.36	473.11	8"	PVC	60 LF	2.08%
RD-7	JB-2	473.11	472.80	8"	PVC	15 LF	2.08%
BLDG-4	RD-4	476.46	476.23	8"	PVC	11 LF	2.08%
BLDG-5	RD-5	475.52	475.29	8"	PVC	11 LF	2.08%
BLDG-6	RD-6	474.59	474.36	8"	PVC	11 LF	2.08%
BLDG-7	RD-7	473.65	473.11	8"	PVC	26 LF	2.08%
BLDG-8	RD-8	478.00	477.70	8"	PVC	14 LF	2.08%
RD-8	RD-9	477.70	476.76	8"	PVC	45 LF	2.08%
RD-9	RD-10	476.76	475.51	8"	PVC	60 LF	2.08%
RD-10	RD-11	475.51	474.88	8"	PVC	30 LF	2.08%
RD-11	CB-5	474.88	473.43	8"	PVC	55 LF	2.08%
BLDG-9	RD-9	477.05	476.76	8"	PVC	14 LF	2.08%
BLDG-10	RD-10	475.80	475.51	8"	PVC	14 LF	2.08%
BLDG-11	RD-11	476.00	474.88	8"	PVC	54 LF	2.08%

NOTE: ALL CLEANOUTS SHALL BE INSTALL FLUSH WITH THE FINAL GRADE ELEVATION.

NOTE:
AN EROSION AND SEDIMENT CONTROL PLAN APPROVED BY NCDENR IS REQUIRED PRIOR TO ANY LAND DISTURBANCE ACTIVITY.

ALL CONSTRUCTION TO BE IN ACCORDANCE WITH ALL TOWN OF PITTSBORO AND/OR NCDOT STANDARDS AND SPECIFICATIONS.

SURVEY NOTE:

ALL EXISTING SITE AND TOPOGRAPHIC INFORMATION SHOWN BASED ON AN ALTA/ACSM LAND TITLE SURVEY DATED FEBRUARY 15, 2013. PROVIDED BY WHITHERS & RAVENEL. 115 MACKENAN DR, CARY NC 27511. PHONE 919-469-3340

GRAPHIC SCALE IN FEET
0 15 30 60
SCALE 1" = 30 FT

NORTH

No.	REVISIONS	DATE	BY
5	REVISED PER TOWN OF PITTSBORO 3RD COMMENTS	7/30/14	KCG
4	NCDENR EXPRESS REVIEW COMMENTS	7/25/14	KCG
3	NCDENR EXPRESS REVIEW COMMENTS	7/18/14	KCG
2	REVISED PER TOWN OF PITTSBORO 2ND COMMENTS	7/16/14	BTO
1	REVISED PER TOWN OF PITTSBORO 1ST COMMENTS	5/21/14	WJB

Kimley»Horn

© 2014 KIMLEY-HORN AND ASSOCIATES, INC.
333 FAYETTEVILLE STREET, SUITE 600, RALEIGH, NC 27601
PHONE: 919-835-1494 FAX: 919-653-5847
WWW.KIMLEY-HORN.COM

KHA PROJECT 012325022
DATE 01/28/2014
SCALE AS SHOWN
DESIGNED BY BTO
DRAWN BY KCG
CHECKED BY WJB

CHATHAM MEDICAL OFFICE BUILDING

PREPARED FOR

CHATHAM PARK INVESTORS LLC

PITTSBORO NC

NORTH CAROLINA PROFESSIONAL SEAL 039196 ENGINEER W. JORDAN BRENNER
7/30/14

GRADING AND DRAINAGE PLAN

SHEET NUMBER

C-400

Plotted By: Crystal, Craig Sheet Set: Chatham Medical Office Building Layout: C-400 GRADING AND DRAINAGE PLAN July 30, 2014 09:36:22am K:\RDT_LDEV\012325022_chatham medi\planning phase\15-cost files\plansheets\C-400 GRADING AND DRAINAGE PLAN.dwg
This document, together with the concepts and designs presented herein, as an instrument of service, is intended only for the specific purpose and client for which it was prepared. Reuse of and improper reliance on this document without written authorization and adaptation by Kimley-Horn and Associates, Inc. shall be without liability to Kimley-Horn and Associates, Inc.

Plotted By:Geamont, Craig Sheet Set:Chatham Medical Office Building Layout:C-401 GRADING AND DRAINAGE PLAN July 18, 2014 10:43:10am K:\RDT_LDEV\012325022 chathom mob\planning phase\15 cad files\plansheets\C-401 GRADING AND DRAINAGE PLAN.dwg
This document, together with the concepts and designs presented herein, as an instrument of service, is intended only for the specific purpose and client for which it was prepared. Reuse of and improper reliance on this document without written authorization and adaptation by Kimley-Horn and Associates, Inc. shall be without liability to Kimley-Horn and Associates, Inc.

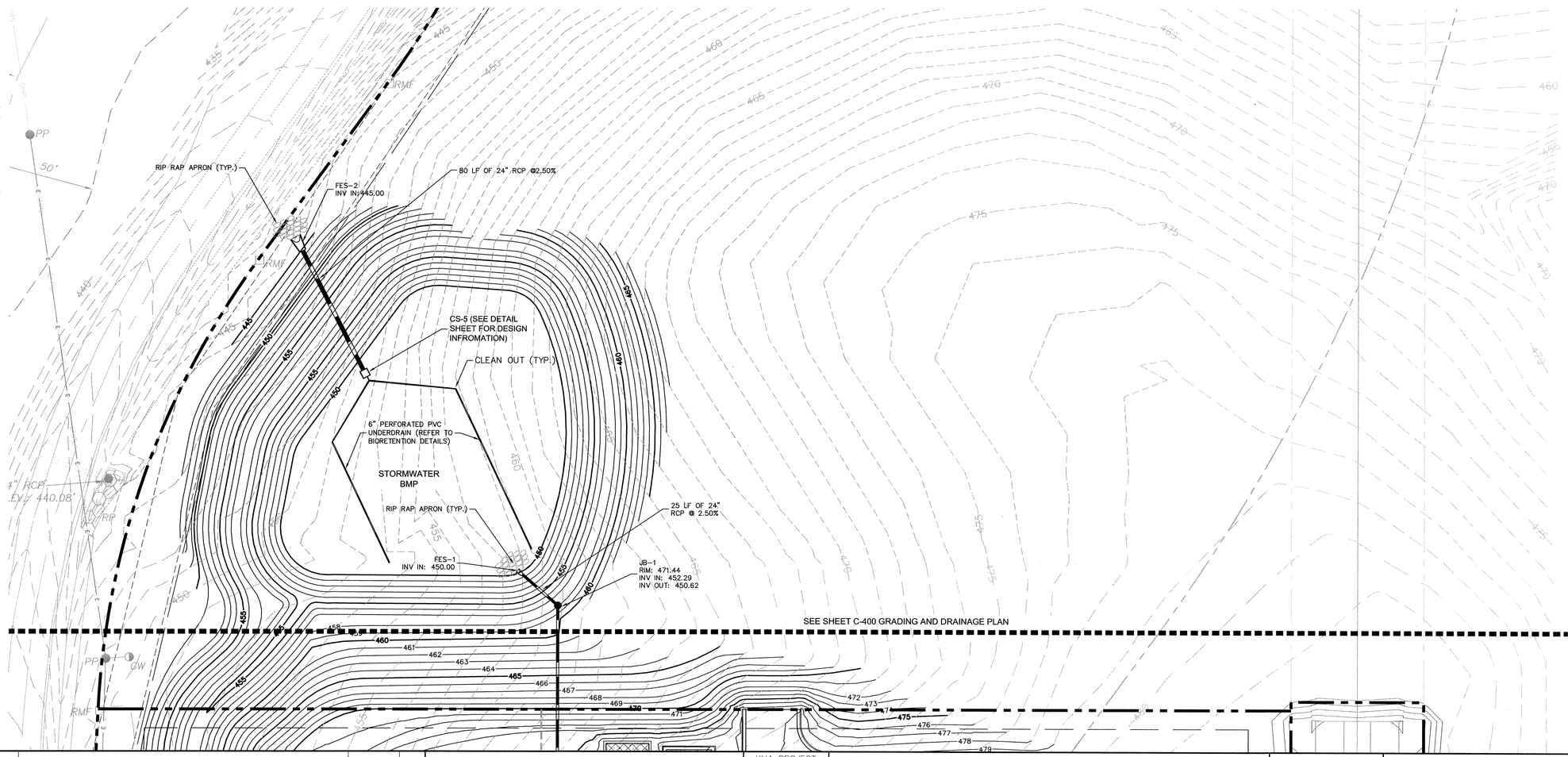

LEGEND

100	PROPOSED CONTOUR
100	EXISTING CONTOUR
+ 70.50	PROPOSED SPOT ELEVATION
	CATCH BASIN
	DROP INLET
	RCP PIPE
CL	LIMITS OF DISTURBANCE
/// TPF	SILT FENCE/TREE PROTECTION FENCE
CS	CONTROL STRUCTURE
CB	CATCH BASIN
HP	HIGH POINT
LP	LOW POINT
TC	TOP OF CURB
BC	BOTTOM OF CURB
HPS	HIGH POINT OF SWALE

ALL CONSTRUCTION TO BE IN ACCORDANCE WITH ALL TOWN OF PITTSBORO AND/OR NCDOT STANDARDS AND SPECIFICATIONS.

SURVEY NOTE:

ALL EXISTING SITE AND TOPOGRAPHIC INFORMATION SHOWN BASED ON AN ALTA/ACSM LAND TITLE SURVEY DATED FEBRUARY 15, 2013. PROVIDED BY WHITHERS & RAVENEL. 115 MACKENAN DR, CARY NC 27511. PHONE 919-469-3340

GRAPHIC SCALE IN FEET
0 15 30 60
SCALE 1" = 30 FT

NORTH

No.	REVISIONS	DATE	BY
3	NCDENR EXPRESS REVIEW COMMENTS	7/18/14	KCG
2	REVISED PER TOWN OF PITTSBORO 2ND COMMENTS	7/16/14	BTO
1	REVISED PER TOWN OF PITTSBORO 1ST COMMENTS	5/21/14	WJB

Kimley»Horn

© 2014 KIMLEY-HORN AND ASSOCIATES, INC.

333 FAYETTEVILLE STREET, SUITE 600, RALEIGH, NC 27601
PHONE: 919-835-1494 FAX: 919-653-5847
WWW.KIMLEY-HORN.COM

KHA PROJECT	012325022
DATE	01/28/2014
SCALE	AS SHOWN
DESIGNED BY	BTO
DRAWN BY	KCG
CHECKED BY	WJB

CHATHAM MEDICAL OFFICE BUILDING

PREPARED FOR

CHATHAM PARK INVESTORES LLC

PITTSBORO NC

NORTH CAROLINA PROFESSIONAL SEAL 039196 ENGINEER W. JORDAN BREWER
7/18/14

GRADING AND DRAINAGE PLAN

SHEET NUMBER

C-401

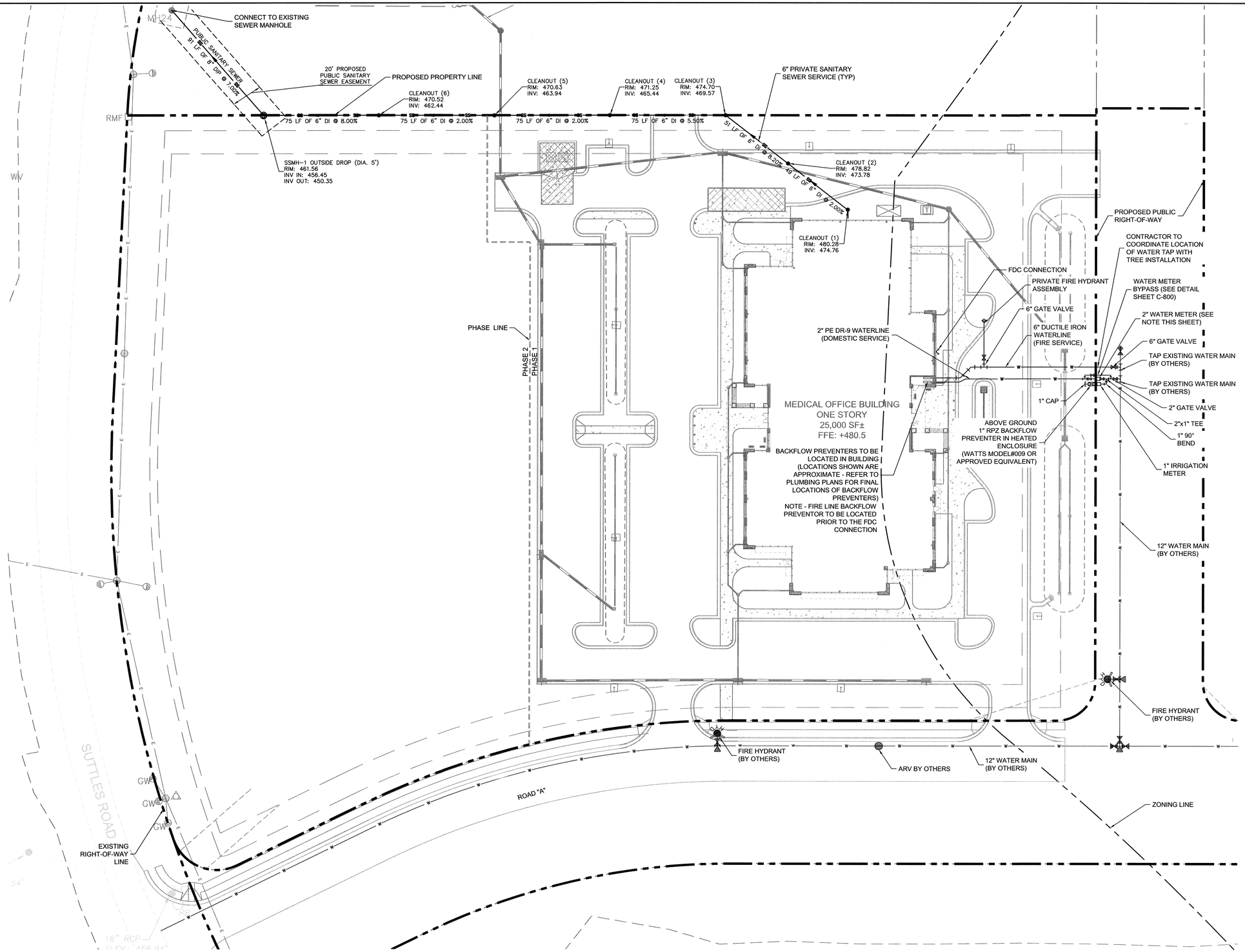

LEGEND

⊠	PROPOSED BACKFLOW PREVENTER
□	PROPOSED METER
●CO	SANITARY SEWER CLEANOUT
—— E ——	PROPOSED ELECTRIC LINE
—— G ——	PROPOSED GAS LINE
—— SS ——	PROPOSED SANITARY SEWER LINE
—— T ——	PROPOSED TELEPHONE/CABLE LINE
—— W ——	PROPOSED WATER LINE
—— W ——	EXISTING WATER LINE
—— SS ——	EXISTING SANITARY SEWER LINE
—— FO ——	EXISTING FIBER OPTIC
—— E ——	EXISTING ELECTRIC

TOWN OF PITTSBORO STANDARD UTILITY NOTES:

1. OWNER / CONTRACTOR SHALL NOTIFY TOWN OF PITTSBORO AT LEAST 48 HOURS PRIOR TO BEGINNING ANY CONSTRUCTION WORK. ONCE WORK HAS BEGUN, AT LEAST 48 HOURS NOTICE SHALL BE GIVEN PRIOR TO ANY SORT OF DISRUPTION TO THE TOWN'S SERVICES SUCH AS TAPPING WATER MAIN, OPERATING VALVES, CLOSING STREETS, PLUGGING SEWER, ETC.
2. UTILITY SEPARATION REQUIREMENTS:

A) A DISTANCE OF 100' SHALL BE MAINTAINED BETWEEN SANITARY SEWER & ANY PRIVATE OR PUBLIC WATER SUPPLY SOURCE SUCH AS AN IMPOUNDED RESERVOIR USED AS A SOURCE OF DRINKING WATER. IF ADEQUATE LATERAL SEPARATION CANNOT BE ACHIEVED, FERROUS SANITARY SEWER PIPE SHALL BE SPECIFIED & INSTALLED TO WATERLINE SPECIFICATIONS. HOWEVER, THE MINIMUM SEPARATION SHALL NOT BE LESS THAN 25' FROM A PRIVATE WELL OR 50' FROM A PUBLIC WELL.

B) WHEN INSTALLING WATER &/OR SEWER MAINS, THE HORIZONTAL SEPARATION BETWEEN UTILITIES SHALL BE 10'. IF THIS SEPARATION CANNOT BE MAINTAINED DUE TO EXISTING CONDITIONS, THE VARIATION ALLOWED IS THE WATER MAIN IN A SEPARATE TRENCH WITH THE ELEVATION OF THE WATER MAIN AT LEAST 18" ABOVE THE TOP OF THE SEWER. ALL DISTANCES ARE MEASURED FROM OUTSIDE DIAMETER TO OUTSIDE DIAMETER.

C) WHERE IT IS IMPOSSIBLE TO OBTAIN PROPER SEPARATION, OR ANYTIME A SANITARY SEWER PASSES OVER A WATERMAIN, DIP MATERIALS OR STEEL ENCASEMENT EXTENDED 10' ON EACH SIDE OF CROSSING MUST BE SPECIFIED & INSTALLED TO WATERLINE SPECIFICATIONS.

D) MAINTAIN 18" MIN. VERTICAL SEPARATION AT ALL WATERMAIN AND RCP STORM DRAIN CROSSINGS. MAINTAIN 24" MIN. VERTICAL SEPARATION AT ALL SANITARY SEWER & RCP STORM DRAIN CROSSING. WHERE ADEQUATE SEPARATIONS CANNOT BE ACHIEVED, SPECIFY DIP MATERIALS & A CONCRETE CRADLE HAVING 6" MIN. CLEARANCE.

3. ANY NECESSARY FIELD REVISIONS ARE SUBJECT TO REVIEW & APPROVAL OF AN AMENDED PLAN &/OR PROFILE BY THE TOWN OF PITTSBORO PUBLIC UTILITIES DEPARTMENT.
4. CONTRACTOR SHALL MAINTAIN CONTINUOUS WATER & SEWER SERVICE TO EXISTING RESIDENCES & BUSINESSES THROUGHOUT CONSTRUCTION OF PROJECT. ANY NECESSARY SERVICE INTERRUPTIONS SHALL BE PRECEDED BY A 48 HOUR ADVANCE NOTICE TO THE TOWN OF PITTSBORO PUBLIC UTILITIES DEPARTMENT.
5. 3.0' MINIMUM COVER IS REQUIRED ON ALL WATER MAINS.
6. PRESSURE REDUCING VALVES ARE REQUIRED ON ALL WATER SERVICES EXCEEDING 80 PSI; BACKWATER VALVES ARE REQUIRED ON ALL SANITARY SEWER SERVICES HAVING BUILDING DRAINS LOWER THAN 1.0" ABOVE THE NEXT UPSTREAM MANHOLE.
7. ALL ENVIRONMENTAL PERMITS APPLICABLE TO THE PROJECT MUST BE OBTAINED FROM NCDWQ, USACE, AND/OR FEMA FOR ANY RIPARIAN BUFFER, WETLAND, &/OR FLOODPLAIN IMPACTS (RESPECTIVELY).

TOWN OF PITTSBORO UTILITY NOTIFICATION NOTE:

1. THE OWNER/CONTRACTOR SHALL NOTIFY THE TOWN OF PITTSBORO AT LEAST 48 HOURS PRIOR TO BEGINNING ANY CONSTRUCTION WORK. ONCE WORK HAS BEGUN, AT LEAST 48 HOURS NOTICE SHALL BE GIVEN PRIOR TO ANY SORT OF DISRUPTION TO THE TOWN'S SERVICES SUCH AS TAPPING WATER MAINS, OPERATING VALVES, CLOSING STREETS, PLUGGING SEWERS, ETC.
2. NOTIFICATION MUST BE PROVIDED BY DIRECT COMMUNICATION. VOICE MAIL OR EMAIL WILL NOT BE CONSIDERED PROPER NOTIFICATION UNLESS ADEQUATELY RESPONDED TO BY A TOWN OF PITTSBORO REPRESENTATIVE.
3. THE OWNER/CONSTRACTOR SHALL BE RESPONSIBLE FOR NOTIFYING ALL CUSTOMERS AFFECTED BY SERVICES INTERRUPTIONS. THE TOWN OF PITTSBORO WILL NOT APPROVE SERVICE INTERRUPTIONS UNTIL PROOF THAT PROPER CUSTOMER NOTIFICATION HAS BEEN PROVIDED.
4. EXISTING VALVES SHALL BE OPERATED ONLY WITH A REPRESENTATIVE OF THE TOWN OF PITTSBORO PRESENT.

NOTE – WATER METER SHALL BE PROVIDED BY THE CONTRACTOR AND SHALL BE A NEPTUNE RADIO-READ METER CONFORMING TO AWWA C702 WITH RADIO READ OUTPUT THAT IS CONSISTENT WITH THE TOWN OF PITTSBORO STANDARDS AT THE TIME OF INSTALLATION.

NOTE – VAULT SHALL BE A PRE-CAST CONCRETE ADEQUATELY SIZED FOR THE METER AND ALL APPURTENANCES WITH 12" CLEARANCE BETWEEN WALLS AND ALL PARTS.

ALL CONSTRUCTION TO BE IN ACCORDANCE WITH ALL TOWN OF PITTSBORO AND/OR NCDOT STANDARDS AND SPECIFICATIONS.

SURVEY NOTE:

ALL EXISTING SITE AND TOPOGRAPHIC INFORMATION SHOWN BASED ON AN ALTA/ACSM LAND TITLE SURVEY DATED FEBRUARY 15, 2013. PROVIDED BY WHITHERS & RAVENEL. 115 MACKENAN DR, CARY NC 27511. PHONE 919-469-3340

GRAPHIC SCALE IN FEET
0 15 30 60
SCALE 1" = 30 FT

NORTH

No.	REVISIONS	DATE	BY
6	REVISED PER TOWN OF PITTSBORO 3RD COMMENTS	7/30/14	KCG
4	NCDENR EXPRESS REVIEW COMMENTS	7/25/14	KCG
3	NCDENR EXPRESS REVIEW COMMENTS	7/18/14	KCG
2	REVISED PER TOWN OF PITTSBORO 2ND COMMENTS	7/16/14	BTO
1	REVISED PER TOWN OF PITTSBORO 1ST COMMENTS	5/21/14	WJB

Kimley»Horn

© 2014 KIMLEY-HORN AND ASSOCIATES, INC.

333 FAYETTEVILLE STREET, SUITE 600, RALEIGH, NC 27601
PHONE: 919-835-1494 FAX: 919-653-5847
WWW.KIMLEY-HORN.COM

KHA PROJECT 012325022
DATE 01/28/2014
SCALE AS SHOWN
DESIGNED BY BTO
DRAWN BY KCG
CHECKED BY WJB

CHATHAM MEDICAL OFFICE BUILDING

PREPARED FOR

CHATHAM PARK INVESTORS LLC

PITTSBORO NC

NORTH CAROLINA PROFESSIONAL ENGINEER SEAL 039196 JORDAN BREWER
7/30/14

UTILITY PLAN

SHEET NUMBER

C-500

Plotted By:Gardner, Craig Sheet Set:Chatham Medical Office Building Layout:C-500 UTILITY PLAN July 30, 2014 11:19:31am K:\RDT_LDEV\012325022_chatham mdo\planning phase\15-cpd files\plansheets\C-500 UTILITY PLAN.dwg
This document, together with the concepts and designs presented herein, as an instrument of service, is intended only for the specific purpose and client for which it was prepared. Reuse of and improper reliance on this document without written authorization and adaptation by Kimley-Horn and Associates, Inc. shall be without liability to Kimley-Horn and Associates, Inc.

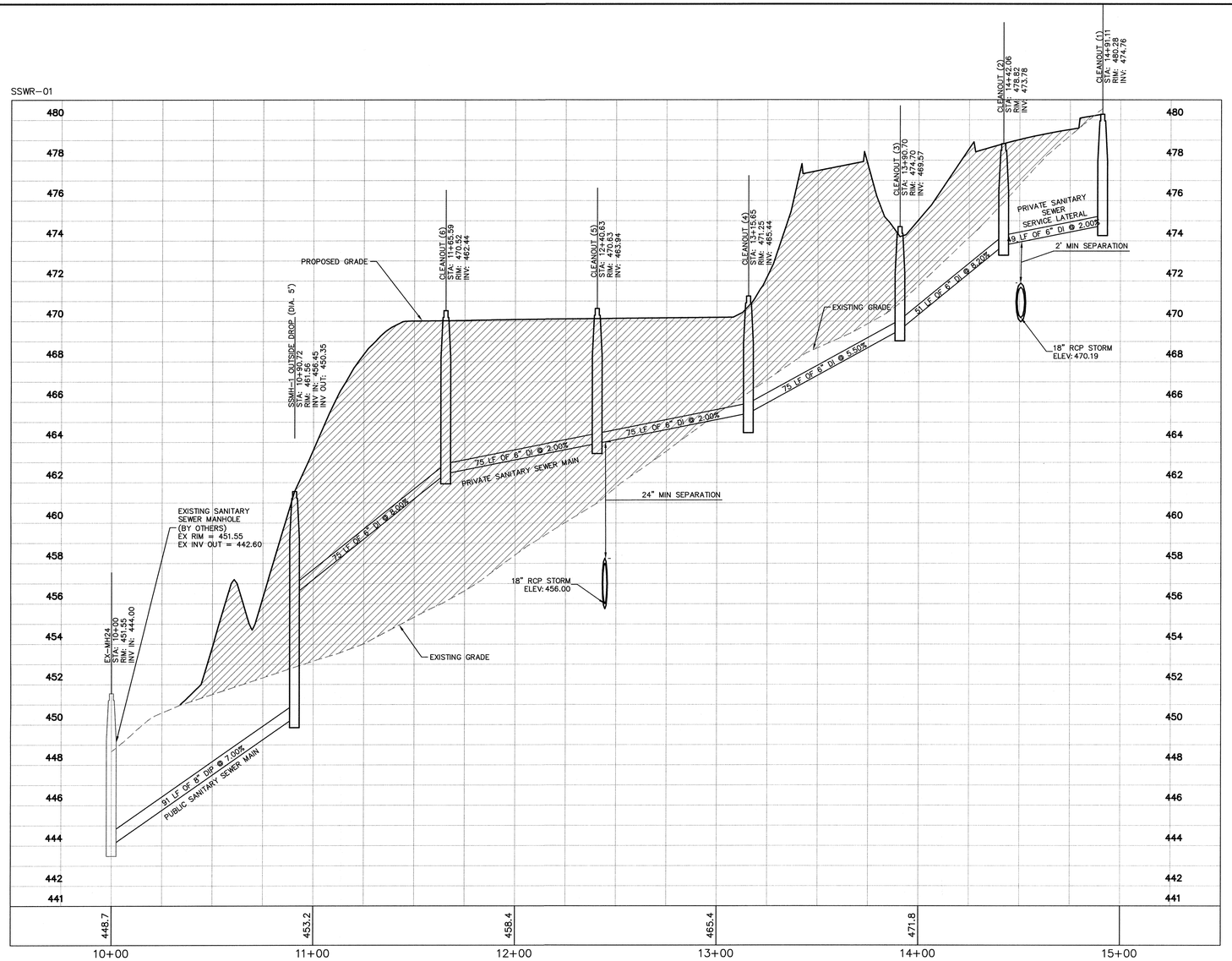

SANITARY SEWER PROFILE

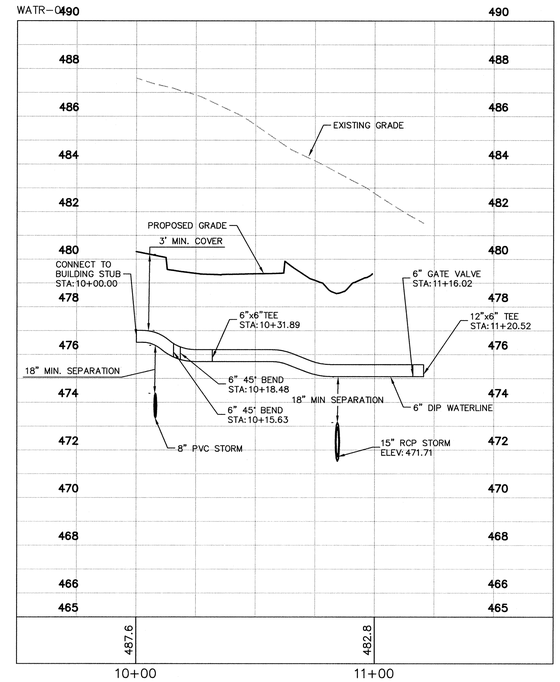

WATERLINE PROFILE

GRAPHIC SCALE IN FEET
0 15 30 60
HORIZONTAL

0 1.5 3 6
VERTICAL

LEGEND

C/L OF EXISTING GRADE

C/L OF EXISTING GRADE

FILL

ALL CONSTRUCTION TO BE IN ACCORDANCE WITH ALL TOWN OF PITTSBORO AND/OR NCDOT STANDARDS AND SPECIFICATIONS.

SURVEY NOTE:

ALL EXISTING SITE AND TOPOGRAPHIC INFORMATION SHOWN BASED ON AN ALTA/ACSM LAND TITLE SURVEY DATED FEBRUARY 15, 2013. PROVIDED BY WHITHERS & RAVENEL. 115 MACKENAN DR, CARY NC 27511. PHONE 919-469-3340

TOWN OF PITTSBORO STANDARD UTILITY NOTES:

1. OWNER / CONTRACTOR SHALL NOTIFY TOWN OF PITTSBORO AT LEAST 48 HOURS PRIOR TO BEGINNING ANY CONSTRUCTION WORK. ONCE WORK HAS BEGUN, AT LEAST 48 HOURS NOTICE SHALL BE GIVEN PRIOR TO ANY SORT OF DISRUPTION TO THE TOWN'S SERVICES SUCH AS TAPPING WATER MAIN, OPERATING VALVES, CLOSING STREETS, PLUGGING SEWER, ETC.

2. UTILITY SEPARATION REQUIREMENTS:

A) A DISTANCE OF 100' SHALL BE MAINTAINED BETWEEN SANITARY SEWER & ANY PRIVATE OR PUBLIC WATER SUPPLY SOURCE SUCH AS AN IMPOUNDED RESERVOIR USED AS A SOURCE OF DRINKING WATER. IF ADEQUATE LATERAL SEPARATION CANNOT BE ACHIEVED, FERROUS SANITARY SEWER PIPE SHALL BE SPECIFIED & INSTALLED TO WATERLINE SPECIFICATIONS. HOWEVER, THE MINIMUM SEPARATION SHALL NOT BE LESS THAN 25' FROM A PRIVATE WELL OR 50' FROM A PUBLIC WELL.

B) WHEN INSTALLING WATER &/OR SEWER MAINS, THE HORIZONTAL SEPARATION BETWEEN UTILITIES SHALL BE 10'. IF THIS SEPARATION CANNOT BE MAINTAINED DUE TO EXISTING CONDITIONS, THE VARIATION ALLOWED IS THE WATER MAIN IN A SEPARATE TRENCH WITH THE ELEVATION OF THE WATER MAIN AT LEAST 18" ABOVE THE TOP OF THE SEWER. ALL DISTANCES ARE MEASURED FROM OUTSIDE DIAMETER TO OUTSIDE DIAMETER.

C) WHERE IT IS IMPOSSIBLE TO OBTAIN PROPER SEPARATION, OR ANYTIME A SANITARY SEWER PASSES OVER A WATERMAIN, DIP MATERIALS OR STEEL ENCASEMENT EXTENDED 10' ON EACH SIDE OF CROSSING MUST BE SPECIFIED & INSTALLED TO WATERLINE SPECIFICATIONS.

D) MAINTAIN 18" MIN. VERTICAL SEPARATION AT ALL WATERMAIN AND RCP STORM DRAIN CROSSINGS. MAINTAIN 24" MIN. VERTICAL SEPARATION AT ALL SANITARY SEWER & RCP STORM DRAIN CROSSING. WHERE ADEQUATE SEPARATIONS CANNOT BE ACHIEVED, SPECIFY DIP MATERIALS & A CONCRETE CRADLE HAVING 6" MIN. CLEARANCE.

3. ANY NECESSARY FIELD REVISIONS ARE SUBJECT TO REVIEW & APPROVAL OF AN AMENDED PLAN &/OR PROFILE BY THE TOWN OF PITTSBORO PUBLIC UTILITIES DEPARTMENT.

4. CONTRACTOR SHALL MAINTAIN CONTINUOUS WATER & SEWER SERVICE TO EXISTING RESIDENCES & BUSINESSES THROUGHOUT CONSTRUCTION OF PROJECT. ANY NECESSARY SERVICE INTERRUPTIONS SHALL BE PRECEDED BY A 48 HOUR ADVANCE NOTICE TO THE TOWN OF PITTSBORO PUBLIC UTILITIES DEPARTMENT.

5. 3.0' MINIMUM COVER IS REQUIRED ON ALL WATER MAINS.

6. PRESSURE REDUCING VALVES ARE REQUIRED ON ALL WATER SERVICES EXCEEDING 80 PSI; BACKWATER VALVES ARE REQUIRED ON ALL SANITARY SEWER SERVICES HAVING BUILDING DRAINS LOWER THAN 1.0" ABOVE THE NEXT UPSTREAM MANHOLE.

7. ALL ENVIRONMENTAL PERMITS APPLICABLE TO THE PROJECT MUST BE OBTAINED FROM NCDWQ, USACE, AND/OR FEMA FOR ANY RIPARIAN BUFFER, WETLAND, &/OR FLOODPLAIN IMPACTS (RESPECTIVELY).

TOWN OF PITTSBORO UTILITY NOTIFICATION NOTE:

1. THE OWNER/CONTRACTOR SHALL NOTIFY THE TOWN OF PITTSBORO AT LEAST 48 HOURS PRIOR TO BEGINNING ANY CONSTRUCTION WORK. ONCE WORK HAS BEGUN, AT LEAST 48 HOURS NOTICE SHALL BE GIVEN PRIOR TO ANY SORT OF DISRUPTION TO THE TOWN'S SERVICES SUCH AS TAPPING WATER MAINS, OPERATING VALVES, CLOSING STREETS, PLUGGING SEWERS, ETC.

2. NOTIFICATION MUST BE PROVIDED BY DIRECT COMMUNICATION. VOICE MAIL OR EMAIL WILL NOT BE CONSIDERED PROPER NOTIFICATION UNLESS ADEQUATELY RESPONDED TO BY A TOWN OF PITTSBORO REPRESENTATIVE.

3. THE OWNER/CONSTRACTOR SHALL BE RESPONSIBLE FOR NOTIFYING ALL CUSTOMERS AFFECTED BY SERVICES INTERRUPTIONS. THE TOWN OF PITTSBORO WILL NOT APPROVE SERVICE INTERRUPTIONS UNTIL PROOF THAT PROPER CUSTOMER NOTIFICATION HAS BEEN PROVIDED.

4. EXISTING VALVES SHALL BE OPERATED ONLY WITH A REPRESENTATIVE OF THE TOWN OF PITTSBORO PRESENT.

No.	REVISIONS	DATE	BY
6	REVISED PER TOWN OF PITTSBORO 3RD COMMENTS	7/30/14	KCG
5	NCDENR EXPRESS REVIEW COMMENTS	7/25/14	KCG
4	NCDENR EXPRESS REVIEW COMMENTS	7/18/14	KCG
3	REVISED PER TOWN OF PITTSBORO 2ND COMMENTS	7/16/14	BTO
2	REVISED PER TOWN OF PITTSBORO 1ST COMMENTS	5/21/14	WJB

Kimley»Horn

© 2014 KIMLEY-HORN AND ASSOCIATES, INC.

333 FAYETTEVILLE STREET, SUITE 600, RALEIGH, NC 27601
PHONE: 919-835-1494 FAX: 919-653-5847
WWW.KIMLEY-HORN.COM

KHA PROJECT 012325022
DATE 01/28/2014
SCALE AS SHOWN
DESIGNED BY BTO
DRAWN BY KCG
CHECKED BY WJB

CHATHAM MEDICAL OFFICE BUILDING

PREPARED FOR

CHATHAM PARK INVESTORS LLC

PITTSBORO NC

NORTH CAROLINA PROFESSIONAL SEAL 039196 ENGINEER W. JORDAN BREWER
7/30/14

UTILITY PROFILES

SHEET NUMBER

C-501

Plotted By:Gearhart, Craig Sheet Set:Chatham Medical Office Building Layout:C-501 UTILITY PLAN & PROFILE July 30, 2014 11:43:24am K:\RDT_LDEV\012325022_chatham mob\planning phase\15_cad files\plansheets\C-501 UTILITY PLAN & PROFILE.dwg
This document, together with the concepts and designs presented herein, as an instrument of service, is intended only for the specific purpose and client for which it was prepared. Reuse of and improper reliance on this document without written authorization and adaptation by Kimley-Horn and Associates, Inc. shall be without liability to Kimley-Horn and Associates, Inc.

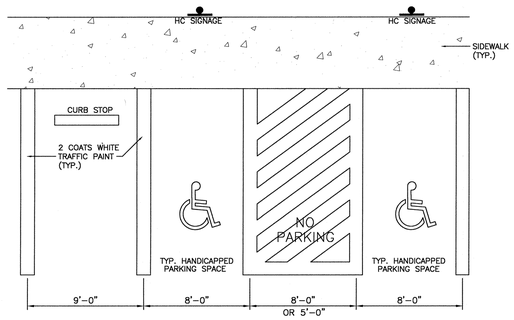

NOTE: SEE SITE PLAN FOR PARKING DIMENSIONS & LAYOUT DIMENSIONS SHOWN ARE MINIMUMS

1 / C-600 **HANDICAPPED PAVEMENT STRIPING DETAIL**
NOT TO SCALE

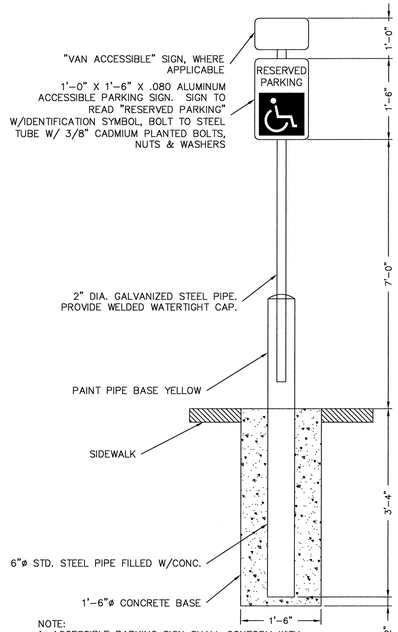

NOTE:
1. ACCESSIBLE PARKING SIGN SHALL CONFORM WITH CURRENT STATE AND LOCAL CODES AND REGULATIONS

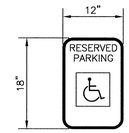

FIGURE – WHITE ON BLUE FIELD

CORNER RADIUS – 1 1/2" (TYP.)

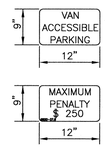

2 / C-600 **HANDICAPPED SIGN DETAILS**
NOT TO SCALE

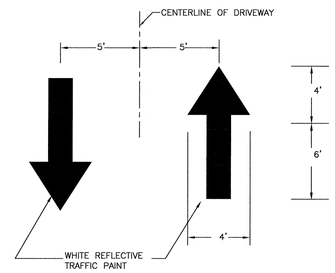

3 / C-600 **DRIVEWAY TRAFFIC FLOW DIRECTIONAL ARROW DETAIL**
NOT TO SCALE

TEMPLATE AVAILABLE FROM MALTISE SIGNS. CONTACT THE CVS CONSTRUCTION PROJECT MANAGER FOR MORE INFORMATION.

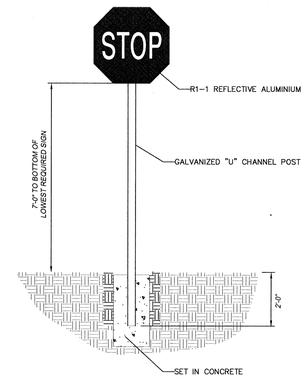

4 / C-600 **STOP SIGN DETAIL**
NOT TO SCALE

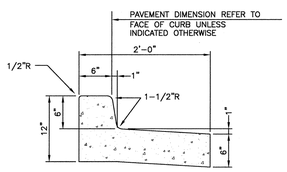

A SPILLING CURB AND GUTTER

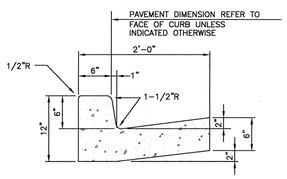

B CATCHING CURB AND GUTTER

CONCRETE FOR CURBING SHALL HAVE A MINIMUM COMPRESSIVE STRENGTH OF 3000 P.S.I. AT 28 DAYS.

CONSTRUCTION STAKING FOR CURBING INSTALLATION SHALL BE REFERENCED (CUT OR FILL) TO THE FACE OF CURB

AT CONTRACTOR'S OPTION THE GUTTER THICKNESS MAY BE INCREASED AT THE EDGE OF PAVEMENT TO MAKE BOTTOM OF GUTTER PARALLEL WITH PAVING OF BASE COURSE.

CONTRACTION JOINTS AT 10'-0" O.C. TOOLED 1/4" (±1/16"-0) WIDE, 1" OR MAX. D/4 DEEP WHICHEVER IS GREATER. EXPANSION JOINTS AT 40' MAX. AND ALL P.C.'s, UNLESS APPROVED OR INDICATED OTHERWISE ON PLAN VIEW JOINT PATTERN.

5 / C-600 **TYPICAL CURB AND GUTTER 24"**
NOT TO SCALE

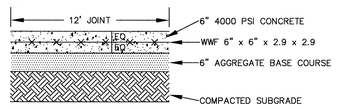

PAVEMENT SECTION TAKEN FROM GEOTECHNICAL REPORT PREPARED BY S&ME DATED APRIL 29, 2013.

6 / C-600 **HEAVY DUTY CONCRETE SECTION**
NOT TO SCALE

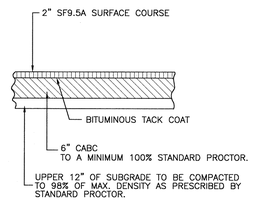

ASPHALT PAVEMENTS

SF9.5A SURFACE COURSE PER NCDOT SPECIFICATIONS

PAVEMENT SECTION TAKEN FROM GEOTECHNICAL REPORT PREPARED BY S&ME DATED APRIL 29, 2013.

7 / C-600 **REGULAR DUTY PAVEMENT SECTION**
NOT TO SCALE

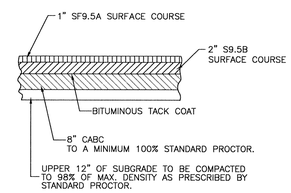

ASPHALT PAVEMENTS

SF9.5A & S9.5B SURFACE COURSE PER NCDOT SPECIFICATIONS

PAVEMENT SECTION TAKEN FROM GEOTECHNICAL REPORT PREPARED BY S&ME DATED APRIL 29, 2013.

8 / C-600 **TYPICAL HEAVY DUTY PAVEMENT SECTION**
NOT TO SCALE

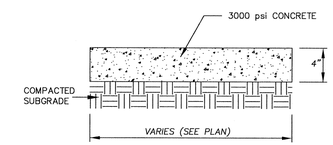

8 / C-600 **CONCRETE SIDEWALK SECTION**
NOT TO SCALE

Plotted By:Brewer, Jordan Sheet Set:Chatham Medical Office Building Layout:C-600 SITE DETAILS July 15, 2014 07:34:15pm K:\RDT_LDEV\012325022_chatham mob\planning phase\15_cad files\plansheets\C-301 SITE PLAN DETAILS.dwg
This document, together with the concepts and designs presented herein, as an instrument of service, is intended only for the specific purpose and client for which it was prepared. Reuse of and improper reliance on this document without written authorization and adaptation by Kimley-Horn and Associates, Inc. shall be without liability to Kimley-Horn and Associates, Inc.

No.	REVISIONS	DATE	BY
2	REVISED PER TOWN OF PITTSBORO 2ND COMMENTS	7/16/14	BTO
1	REVISED PER TOWN OF PITTSBORO 1ST COMMENTS	5/21/14	WJB

Kimley»Horn
© 2014 KIMLEY-HORN AND ASSOCIATES, INC.
333 FAYETTEVILLE STREET, SUITE 600, RALEIGH, NC 27601
PHONE: 919-835-1494 FAX: 919-653-5847
WWW.KIMLEY-HORN.COM

KHA PROJECT	012325022
DATE	01/28/2014
SCALE	AS SHOWN
DESIGNED BY	BTO
DRAWN BY	KCG
CHECKED BY	WJB

CHATHAM MEDICAL OFFICE BUILDING

PREPARED FOR

CHATHAM PARK INVESTORES LLC

PITTSBORO NC

NORTH CAROLINA PROFESSIONAL SEAL 039196 ENGINEER WM. JORDAN BREWER
7/16/14

SITE DETAILS

SHEET NUMBER

C-600

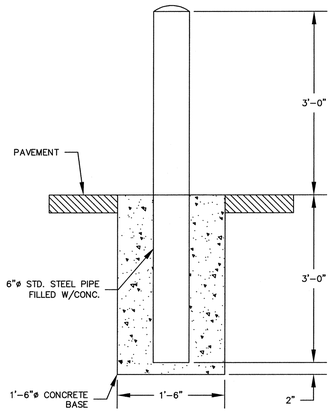

10 C-601 **DECORATIVE BOLLARD**
NOT TO SCALE

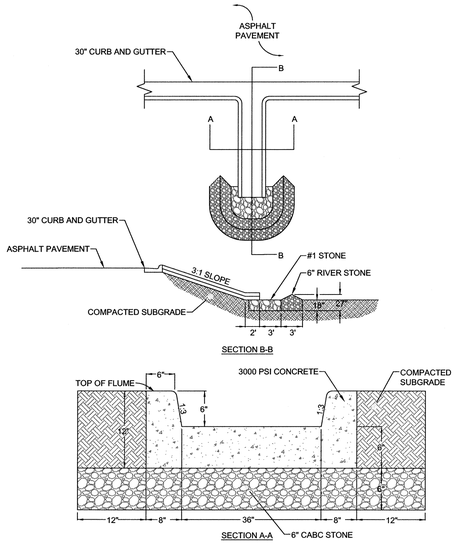

11 C-601 **CONCRETE FLUME**
NOT TO SCALE

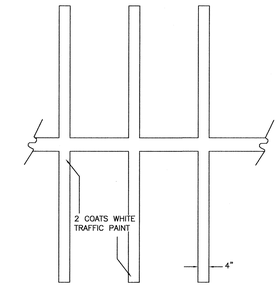

NOTE: SEE SITE PLAN
FOR PARKING DIMENSIONS & LAYOUT

12 C-601 **PAVEMENT STRIPING DETAIL**
NOT TO SCALE

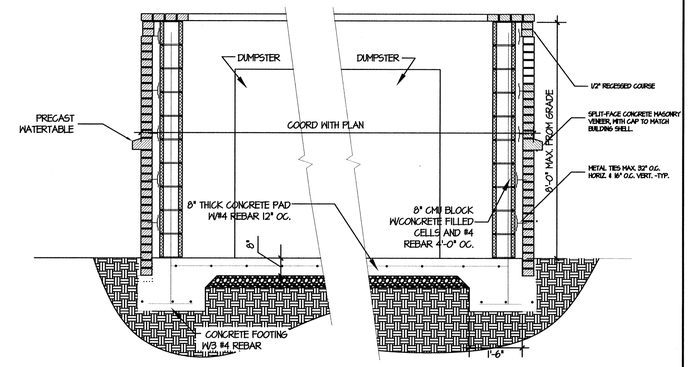

ELEVATION - DUMPSTER PAD ENCLOSURE
NTS

NOTES:
- TRASH FACILITY WILL PREVENT WIND-BLOWN DEBRIS
- ENCLOSURE SHALL BE 6" MINIMUM ABOVE HIGHEST PART OF TRASH FACILITY.

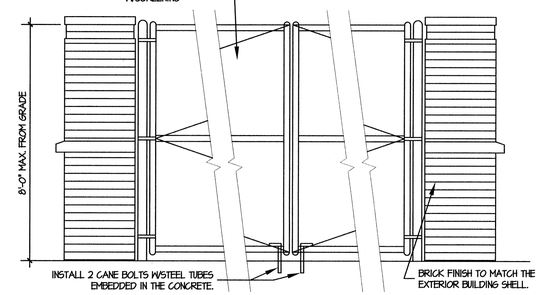

ELEVATION - DUMPSTER PAD ENCLOSURE
NTS

15 C-601 **DUMPSTER ENCLOSURE**
NOT TO SCALE

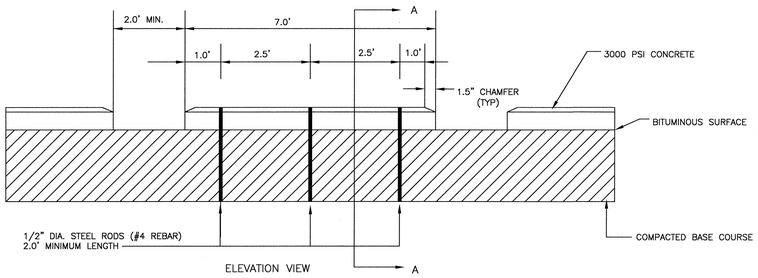

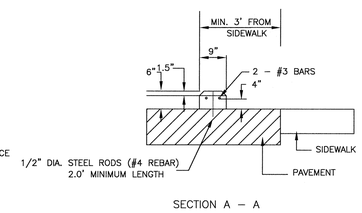

NOTE:
1. ANCHOR RODS TO BE SLEEVED OR GREASED THRU CONCRETE CURBS TO PERMIT RELOCATION OF CURBS.
2. SEE SITE PLAN FOR CURB STOP LOCATIONS. TYPICALLY PLACED 2.5' OFF OF BACK OF CURB

13 C-601 **WHEEL STOP DETAIL**
NOT TO SCALE

NOTES:

1. CROSSWALK MARKINGS ARE 10' IN LENGTH, 2' WIDE AND 4' ON CENTER (WHITE THERMOPLASTIC).
2. CROSSWALK IS NOT PROTECTED BY STOP CONTROL.
3. W11-2 & W16-7P SIGNS AT CROSSWALK ON EACH APPROACH (2X2).

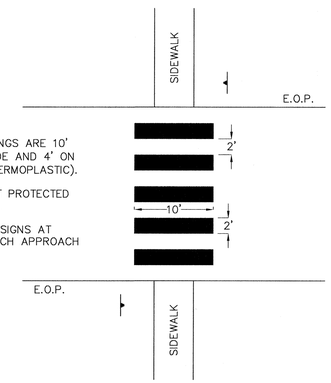

14 C-601 **HIGH VISIBILITY CROSSWALK**
NOT TO SCALE

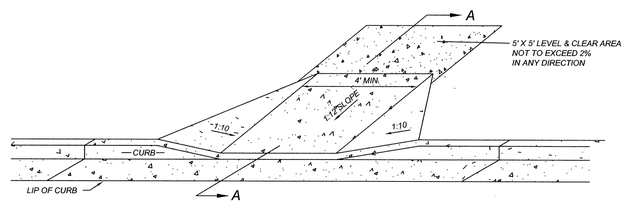

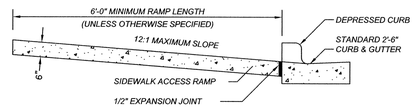

SECTION A-A

16 C-601 **STANDARD HANDICAP RAMP**
NOT TO SCALE

No.	REVISIONS	DATE	BY
2	REVISED PER TOWN OF PITTSBORO 2ND COMMENTS	7/16/14	BTO
1	REVISED PER TOWN OF PITTSBORO 1ST COMMENTS	5/21/14	WJB

Kimley»Horn

© 2014 KIMLEY-HORN AND ASSOCIATES, INC.

333 FAYETTEVILLE STREET, SUITE 600, RALEIGH, NC 27601
PHONE: 919-835-1494 FAX: 919-653-5847
WWW.KIMLEY-HORN.COM

KHA PROJECT 012325022
DATE 01/28/2014
SCALE AS SHOWN
DESIGNED BY BTO
DRAWN BY KCG
CHECKED BY WJB

CHATHAM MEDICAL OFFICE BUILDING

PREPARED FOR

CHATHAM PARK INVESTORES LLC

PITTSBORO NC

NORTH CAROLINA PROFESSIONAL SEAL 039196 ENGINEER W. JORDAN BREWER
7/16/14

SITE DETAILS

SHEET NUMBER
C-601

Plotted By:Brewer, Jordan Sheet Set:Chatham Medical Office Building Layout:C-601 - SITE DETAILS July 15, 2014 07:34:24pm K:\RDT_LDEV\012325022_chatham mob\planning phase\15_cad files\plansheets\C-601 - SITE DETAILS.dwg
This document, together with the concepts and designs presented herein, as an instrument of service, is intended only for the specific purpose and client for which it was prepared. Reuse of and improper reliance on this document without written authorization and adaptation by Kimley-Horn and Associates, Inc. shall be without liability to Kimley-Horn and Associates, Inc.

This document, together with the concepts and designs presented herein, as an instrument of service, is intended only for the specific purpose and client for which it was prepared. Reuse of and improper reliance on this document without written authorization and adaptation by Kimley-Horn and Associates, Inc. shall be without liability to Kimley-Horn and Associates, Inc.

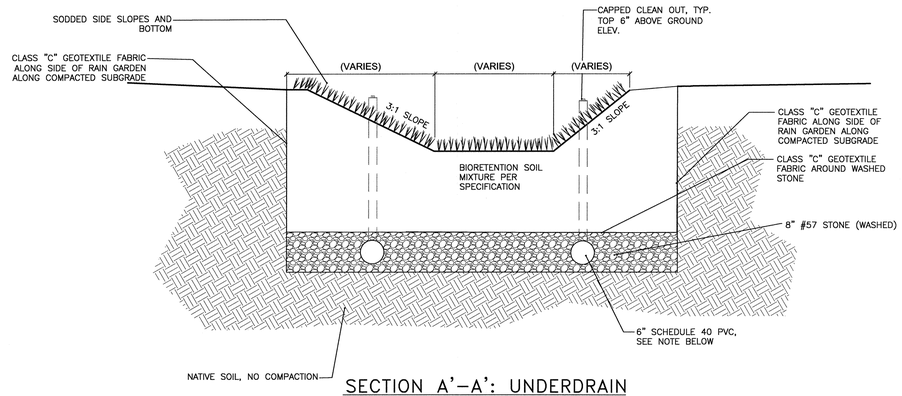

SECTION A'–A': UNDERDRAIN

NOT TO SCALE

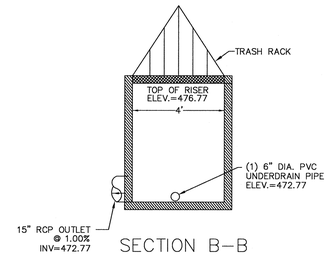

SECTION B–B

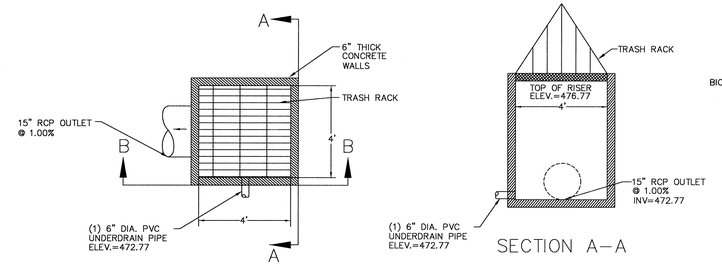

SECTION A–A

BIORETENTION CONTROL STRUCTURE CS–1

NOT TO SCALE

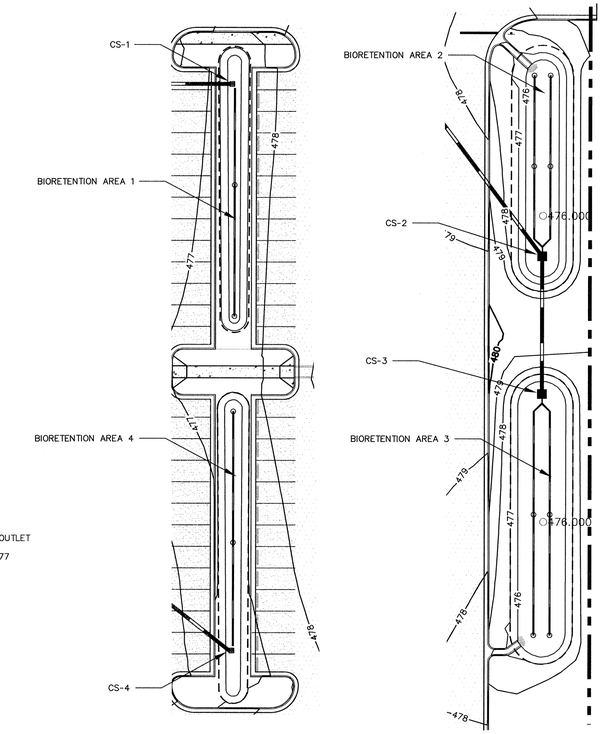

BIORETENTION SOIL MIXTURE

ITEM	PERCENT BY WEIGHT	MATERIAL
SAND	85–88%	CONSTRUCTION SAND
FINES	8–12%	SILT AND CLAY
ORGANIC MATTER	3–5%	PEAT MOSS

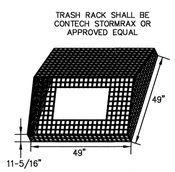

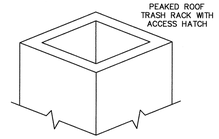

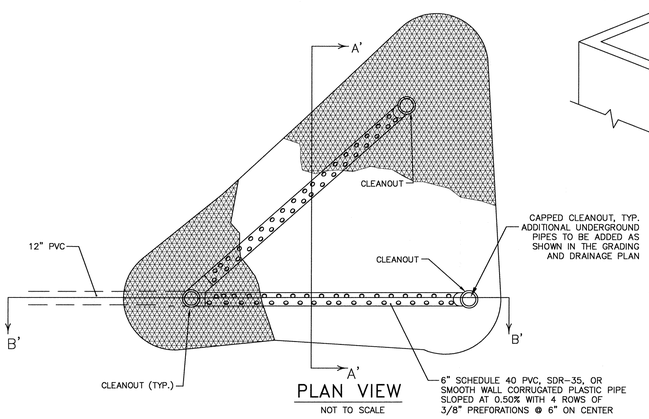

PLAN VIEW

NOT TO SCALE

NOTES:

1. SOIL MIX MUST BE TESTED PRIOR TO INSTALLATION. TEST RESULTS ARE REQUIRED TO BE SUBMITTED TO THE ENGINEER FOR REVIEW AND APPROVAL.
2. IN–SITU SOIL DRAWDOWN TESTING IS REQUIRED. TEST RESULTS ARE REQUIRED TO BE SUBMITTED TO THE ENGINEER FOR REVIEW AND APPROVAL.

RAIN GARDEN MAINTENANCE NOTES:

1. RAIN GARDEN AREA SHOULD DRAIN DOWN IN 12 HOURS AFTER A 1" STORM. IF WATER PONDS LONGER, MAINTENANCE IS REQUIRED.
2. REMOVE SEDIMENT FROM UPSTREAM DRAINAGE AREAS SO RAIN GARDEN DOES NOT CLOG.
3. REMOVE TRASH REGULARLY.

Bioretention Soil Mixture (BSM): shall be placed and graded using low ground–contact pressure equipment or by excavators and/or backhoes operating on the ground adjacent to the bioretention facility. No heavy equipment shall be used within the perimeter of the bioretention facility before, during, or after the placement of the BSM. The BSM shall be placed in horizontal layers not to exceed 12 inches for the entire area of the bioretention facility. The BSM shall be compacted by saturating the entire area of the bioretention facility after each lift of BSM is placed until water flows from the underdrain. Water for saturation shall be applied by spraying or sprinkling. An appropriate sediment control device shall be used to treat any sediment–laden water discharged from the underdrain. If the BSM becomes contaminated during the construction of the facility, the contaminated material shall be removed and replaced with uncontaminated material at no additional cost to the Owner. Final grading of the BSM shall be performed after a 24–hour settling period. Final elevations shall be within 2 inches of elevations shown on the Contract Plans.

The Bioretention Soil Mixture (BSM) shall be a uniform mix, free of stones, stumps, roots or other similar objects larger than two inches excluding mulch. No other materials or substances shall be mixed or dumped within the bioretention area that may be harmful to plant growth, or prove a hindrance to the planting or maintenance operations.

BSM must have a P–index of 10 to 30.

Prior to placing the underdrain and the BSM, the bottom of the excavation shall be roto–tilled to a minimum depth of 6 inches to alleviate any compaction of the facility bottom. Any substitute method for roto–tilling must be approved by the Engineer prior to use. Any ponded water shall be removed from the bottom of the facility and the soil shall be friable before roto–tiling.

Grass sod shall be used in bioretention area.

Grassed sod must not be grown in soil with an impermeable (clay) layer.

BIO–RETENTION BMP

NOTE:
(#) REFERS TO THE BIORETENTION AREA NUMBER ASSOCIATED WITH THE FOLLOWING ELEVATIONS.

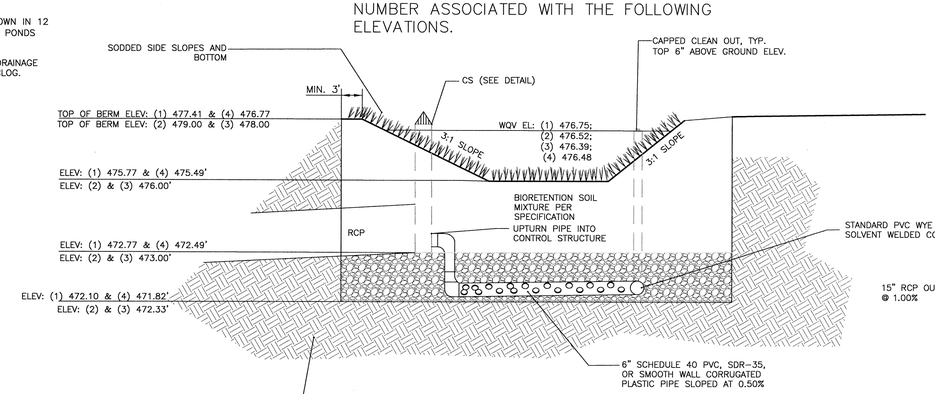

SECTION B'–B': UNDERDRAIN

NOT TO SCALE

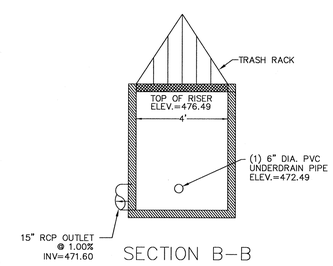

SECTION B–B

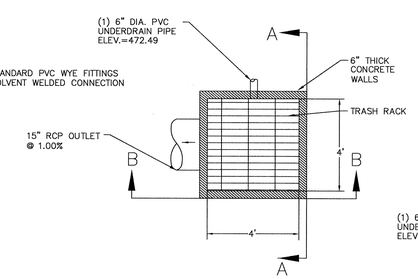

BIORETENTION CONTROL STRUCTURE CS–4

NOT TO SCALE

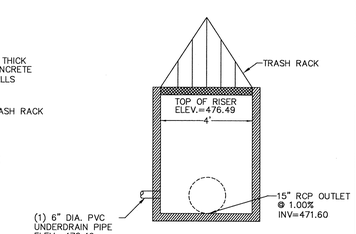

SECTION A–A

No.	REVISIONS	DATE	BY
2	REVISED PER TOWN OF PITTSBORO 2ND COMMENTS	7/16/14	BTO
1	REVISED PER TOWN OF PITTSBORO 1ST COMMENTS	5/21/14	WJB

Kimley»Horn

© 2014 KIMLEY–HORN AND ASSOCIATES, INC.

333 FAYETTEVILLE STREET, SUITE 600, RALEIGH, NC 27601
PHONE: 919–835–1494 FAX: 919–653–5847
WWW.KIMLEY–HORN.COM

KHA PROJECT 012325022
DATE 01/28/2014
SCALE AS SHOWN
DESIGNED BY BTO
DRAWN BY KCG
CHECKED BY WJB

CHATHAM MEDICAL OFFICE BUILDING

PREPARED FOR

CHATHAM PARK INVESTORES LLC

PITTSBORO NC

NORTH CAROLINA PROFESSIONAL SEAL 039196 ENGINEER W. JORDAN BREMER 7/16/14

BIORETENTION AREA DETAILS

SHEET NUMBER

C-700

EARTHERN DAM SPECIFICATIONS

–A MAXIMUM SLOPE OF 3H:1V SHALL BE USED ON THE EMBANKMENTS TO ALLOW MAINTENANCE EQUIPMENT AND TO MAINTAIN GROUND COVER.

–TREATMENT OF SEEPAGE AREAS, SUBGRADE PREPARATION, FOUNDATION DEWATERING AND ROCK FOUNDATION PREPARATION (I.E., TREATMENT WITH SLUSH GROUTING, DENTAL CONCRETE, ETC.) MAY BE REQUIRED AT THE DISCRETION OF THE GEOTECHNICAL ENGINEER. ALL SUCH ACTIVITIES SHALL BE CLOSELY MONITORED AND DOCUMENTED BY THE GEOTECHNICAL ENGINEER.

–TO RE–ESTABLISH VEGETATION AFTER CONSTRUCTION, A 2– TO 3–INCH LAYER OF TOPSOIL SHALL BE PLACED ON THE DISTURBED EMBANKMENT SURFACE AND THE AREA SEEDED AND MULCHED OR HYDROSEEDED.

–A GRASS SURFACE IS REQUIRED TO PREVENT EROSION AND RUTTING. IF VEGETATION IS USED TO STABILIZE THE EMBANKMENT, PROPER MAINTENANCE, INCLUDING MOWING, FERTILIZING, AND RESEEDING BARE–SPOTS, IS REQUIRED TO PREVENT EROSION.

–WHERE FILL IS REQUIRED TO RAISE THE EXISTING GRADES OF THE SITE TO THE NEW SUBGRADE ELEVATIONS INDICATED, SUCH FILL SHALL BE OF EARTH, PLACED COMPACTED AS SPECIFIED. ON–SITE OR OFF–SITE BORROW MATERIAL SHALL BE APPROVED BY THE INDEPENDENT TESTING LABORATORY'S GEOTECHNICAL ENGINEER PRIOR TO BEING PLACED ON PROPOSED FILL AREA.

–ALL SUBGRADE TO RECEIVE FILL SHALL BE EVALUATED BY THE GEOTECHNICAL ENGINEER PRIOR TO PLACING NEW FILL. METHODS FOR EVALUATION SHALL INCLUDE PROOF ROLLING USING TANDEM AXLE DUMP TRUCK OR SIMILAR PNEUMATIC TIRED EQUIPMENT, OR OTHER METHODS AS SPECIFIED BY THE ON–SITE GEOTECHNICAL ENGINEER. ALL SOIL THAT RUTS, PUMPS, OR DEFLECTS EXCESSIVELY AS DETERMINED BY THE GEOTECHNICAL ENGINEER SHALL BE CORRECTED AS SPECIFIED BY THE ON–SITE GEOTECHNICAL ENGINEER.

–METHODS OF CORRECTION MAY INCLUDE DRYING AND COMPACTION, PLACEMENT OF AN 18 TO 24 INCH BRIDGE LIFT OF BORROW MATERIAL APPROVED BY THE GEOTECHNICAL ENGINEER, STABILIZATION WITH FABRIC AND STONE, AND/OR UNDERCUTTING.

–ALL VISIBLE ORGANIC DEBRIS SUCH AS ROOTS AND LIMBS SHALL BE REMOVED FROM THE FILL MATERIAL PRIOR TO COMPACTION TO THE REQUIRED DENSITY. SOILS WITH ORGANIC MATTER CONTENT EXCEEDING 5% BY WEIGHT SHALL NOT BE USED. STONES GREATER THAN 3–INCH (IN ANY DIRECTION) SHALL BE REMOVED FROM THE FILL PRIOR TO COMPACTION.

–THE SURFACE OF THE GROUND AND MOISTURE CONTENT OF THE LOOSENED MATERIAL SHALL BE SUCH THAT IT WILL READILY BOND WITH THE FIRST LAYER OF FILL MATERIAL.

–CONTROLLED FILL, AS SPECIFIED BY THE GEOTECHNICAL ENGINEER, IN THE DAM EMBANKMENT SHALL BE PLACED IN 6–INCH LOOSE LAYERS (3–INCH LOOSE LAYERS WITHIN 3–FEET OF EITHER SIDE OF THE PRINCIPAL SPILLWAY PIPE TO A DEPTH OF 2–FEET OVER THE PIPE) AND SHALL BE COMPACTED TO A DENSITY OF NO LESS THAN 95% OF THE STANDARD PROCTOR MAXIMUM DENSITY AT A MOISTURE CONTENT OF + OR – TWO PERCENTAGE POINTS OF THE OPTIMUM MOISTURE CONTENT IN ACCORDANCE WITH ASTM D698.

–ANY FILL LAYER THAT IS SMOOTH DRUM ROLLED TO REDUCE MOISTURE PENETRATION DURING A STORM EVENT SHALL BE PROPERLY SCARIFIED PRIOR TO THE PLACEMENT OF THE NEXT SOIL LIFT.

–FILL ADJACENT TO THE RISER AND PRINCIPAL SPILLWAY PIPE SHALL BE PLACED SO THAT LIFTS ARE AT THE SAME LEVEL ON BOTH SIDES OF THE STRUCTURES.

–EARTHWORK COMPACTION WITHIN 3–FEET OF ANY STRUCTURES SHALL BE ACCOMPLISHED BY MEANS OF HAND TAMPERS, MANUALLY DIRECTED POWER TAMPERS OR PLATE COMPACTORS OR MINIATURE SELF–PROPELLED ROLLERS.

–SURFACE WATER AND STREAM FLOW SHALL BE CONTINUOUSLY CONTROLLED THROUGHOUT CONSTRUCTION AND THE PLACEMENT OF CONTROLLED FILL.

–AT THE END OF EACH DAYS ACTIVITIES, CONTRACTOR SHALL SEAL SURFACE OF NEW FILL BY USE OF A SMOOTH WHEEL ROLLER AND PROVIDE POSITIVE DRAINAGE OFF OF NEW FILL SURFACE.

–THE GEOTECHINCAL ENGINEER MUST INSPECT AND APPROVE ALL SUBGRADES AND FILL LAYERS BEFORE FURTHER CONSTRUCTION WORK IS PERFORMED THEREON.

–FILL MATERIAL PLACED AT DENSITIES LOWER THAN SPECIFIED MINIMUM DENSITIES OR AT MOISTURE CONTENTS OUTSIDE THE SPECIFIED RANGES OR OTHERWISE NOT CONFORMING TO SPECIFIED REQUIREMENTS SHALL BE REMOVED AND REPLACED WITH ACCEPTABLE MATERIALS.

–THE CONTRACTOR SHALL BE RESPONSIBLE FOR DRYING SOILS TOO WET TO ACHIEVE COMPACTION OR STABILITY. SOILS SHALL NOT BE CONSIDERED UNSUITABLE SOLELY DUE TO MOISTURE CONTENT.

–FOUNDATION AREAS MAY REQUIRE UNDERCUTTING OF COMPRESSIBLE AND/OR UNSUITABLE SOILS IN ADDITION TO THAT INDICATED ON THE PLANS. ALL SUCH UNDERCUTTING SHALL BE PERFORMED AT THE DISCRETION OF THE GEOTECHNICAL ENGINEER AND SHALL BE MONITORED AND DOCUMENTED. IN NO CASE SHALL THERE BE AN ATTEMPT TO STABILIZE ANY PORTIONS OF THE FOUNDATION SOILS WITH CRUSHED STONE.

–COMPACTION BY MEANS OF DROP WEIGHTS FROM A CRANE OR HOIST SHALL NOT BE PERMITTED.

–HEAVY EQUIPMENT SHALL NOT BE ALLOWED TO PASS OVER CAST–IN–PLACE STRUCTURES UNTIL ADEQUATE CURING TIME HAS ELAPSED.

–TESTS OF THE DEGREE (%) OF COMPACTION OF THE PLACED FILL IN THE DAM SHALL BE PERFORMED AS A PART OF THE CONTRACTOR'S NORMAL QUALITY CONTROL PROGRAM FOR THE CONSTRUCTION OF THE DAM. TESTS SHALL BE CONDUCTED CONCURRENT WITH THE INSTALLATION OF THE COMPACTED FILL, AND THE CONTRACTOR SHALL COORDINATE THE CONSTRUCTION OF THE DAM SO THAT THE TESTING CAN BE COMPLETED. SHOULD THE RESULTS OF THE TESTS INDICATE THAT THE SPECIFIED DEGREE OF COMPACTION HAS NOT BEEN OBTAINED, THE PORTIONS OF THE DAM REPRESENTED BY SUCH TESTS SHALL BE REWORKED OR REBUILT. ALL PORTIONS OF THE DAM SHALL ACHIEVE THE SPECIFIED MINIMUM DEGREE OF COMPACTION.

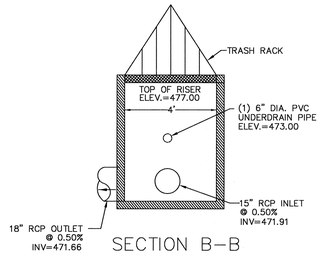

SECTION B–B

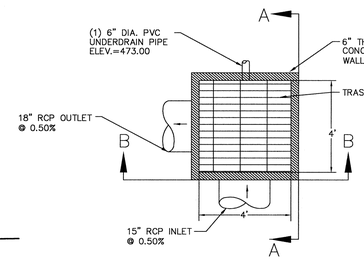

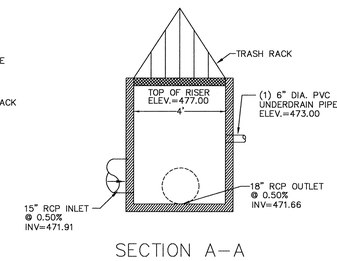

SECTION A–A

BIORETENTION CONTROL STRUCTURE CS–2

NOT TO SCALE

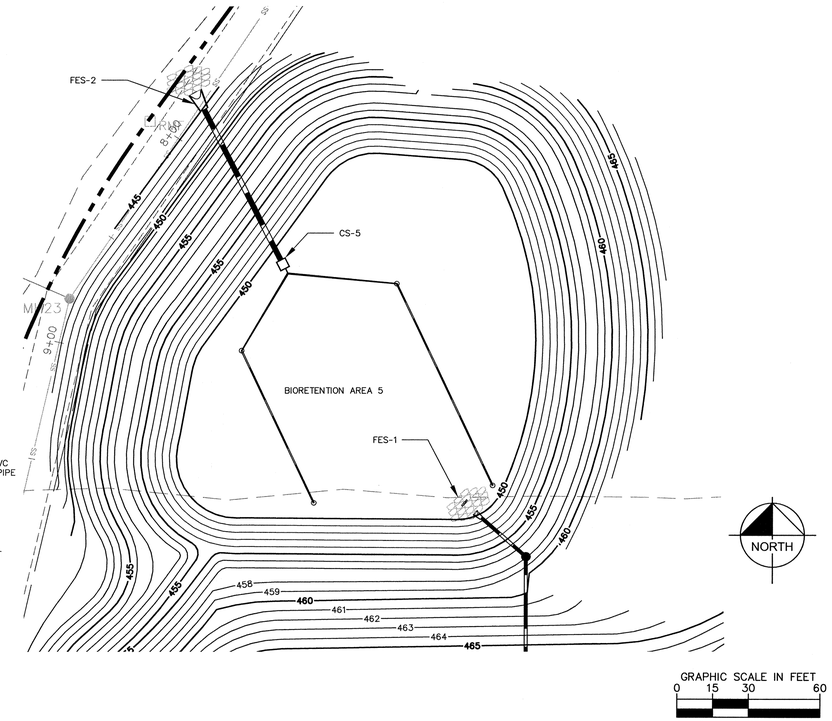

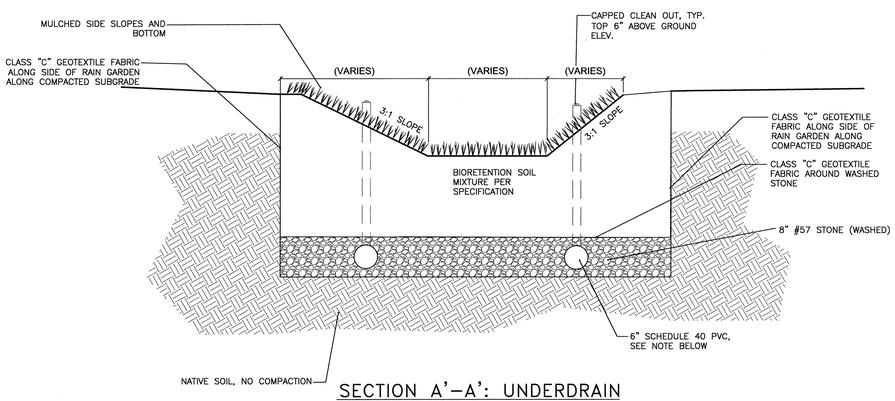

SECTION A'–A': UNDERDRAIN

NOT TO SCALE

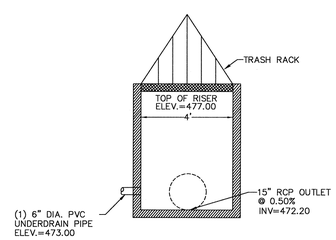

SECTION B–B

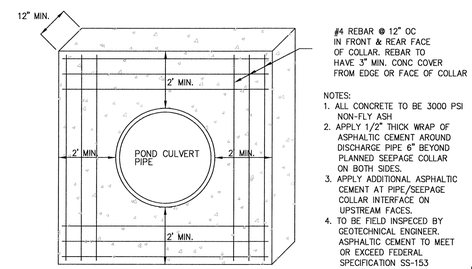

NOTES:
1. ALL CONCRETE TO BE 3000 PSI NON-FLY ASH
2. APPLY 1/2" THICK WRAP OF ASPHALTIC CEMENT AROUND DISCHARGE PIPE 6" BEYOND PLANNED SEEPAGE COLLAR ON BOTH SIDES.
3. APPLY ADDITIONAL ASPHALTIC CEMENT AT PIPE/SEEPAGE COLLAR INTERFACE ON UPSTREAM FACES.
4. TO BE FIELD INSPECED BY GEOTECHNICAL ENGINEER. ASPHALTIC CEMENT TO MEET OR EXCEED FEDERAL SPECIFICATION SS-153 TYPE 1: ASTM-D-2822-75 TYPE 1.

CONCRETE SEEPAGE COLLAR

NOT TO SCALE

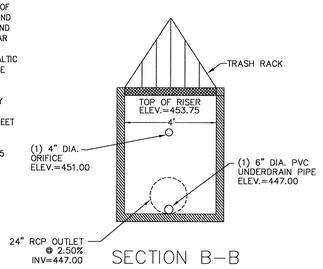

SECTION B–B

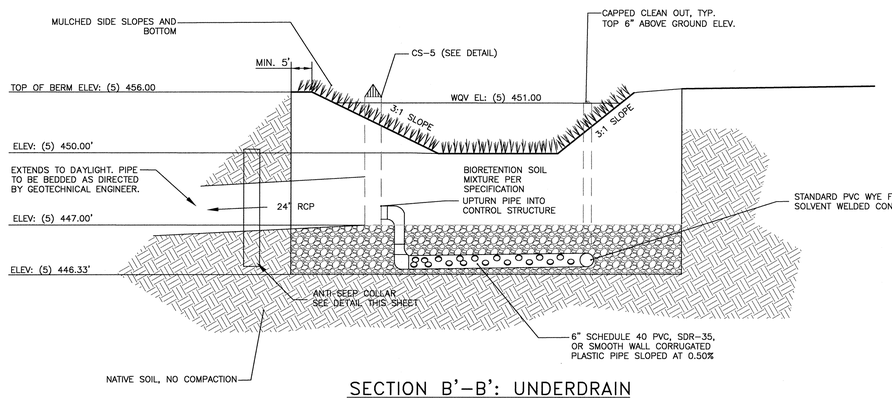

SECTION B'–B': UNDERDRAIN

NOT TO SCALE

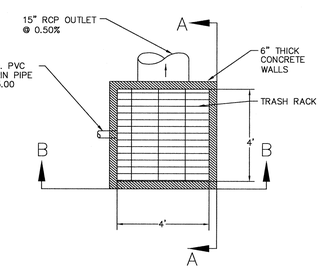

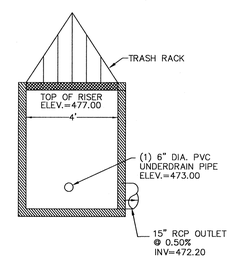

SECTION A–A

BIORETENTION CONTROL STRUCTURE CS–3

NOT TO SCALE

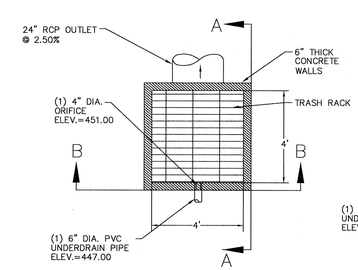

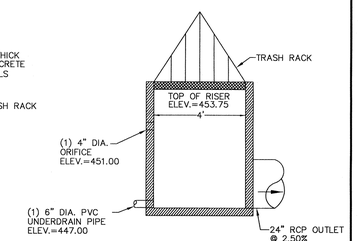

SECTION A–A

BIORETENTION CONTROL STRUCTURE CS–5

NOT TO SCALE

No.	REVISIONS	DATE	BY
2	REVISED PER TOWN OF PITTSBORO 2ND COMMENTS	7/16/14	BTO
1	REVISED PER TOWN OF PITTSBORO 1ST COMMENTS	5/21/14	WJB

Kimley»Horn

© 2014 KIMLEY–HORN AND ASSOCIATES, INC.

333 FAYETTEVILLE STREET, SUITE 600, RALEIGH, NC 27601
PHONE: 919–835–1494 FAX: 919–653–5847
WWW.KIMLEY–HORN.COM

KHA PROJECT 012325022
DATE 01/28/2014
SCALE AS SHOWN
DESIGNED BY BTO
DRAWN BY KCG
CHECKED BY WJB

CHATHAM MEDICAL OFFICE BUILDING
PREPARED FOR
CHATHAM PARK INVESTORES LLC
PITTSBORO NC

NORTH CAROLINA PROFESSIONAL SEAL 039196 ENGINEER W. JORDAN BRIMER
7/16/14

BIORETENTION AREA DETAILS

SHEET NUMBER
C-701

This document, together with the concepts and designs presented herein, as an instrument of service, is intended only for the specific purpose and client for which it was prepared. Reuse of and improper reliance on this document without written authorization and adaptation by Kimley-Horn and Associates, Inc. shall be without liability to Kimley-Horn and Associates, Inc.

STATE OF NORTH CAROLINA DEPT. OF TRANSPORTATION DIVISION OF HIGHWAYS RALEIGH, N.C. 1-02

ENGLISH STANDARD DRAWING FOR **FRAME, GRATES, AND HOOD** FOR USE ON STANDARD CATCH BASIN

SHEET 2 OF 2 **840.03**

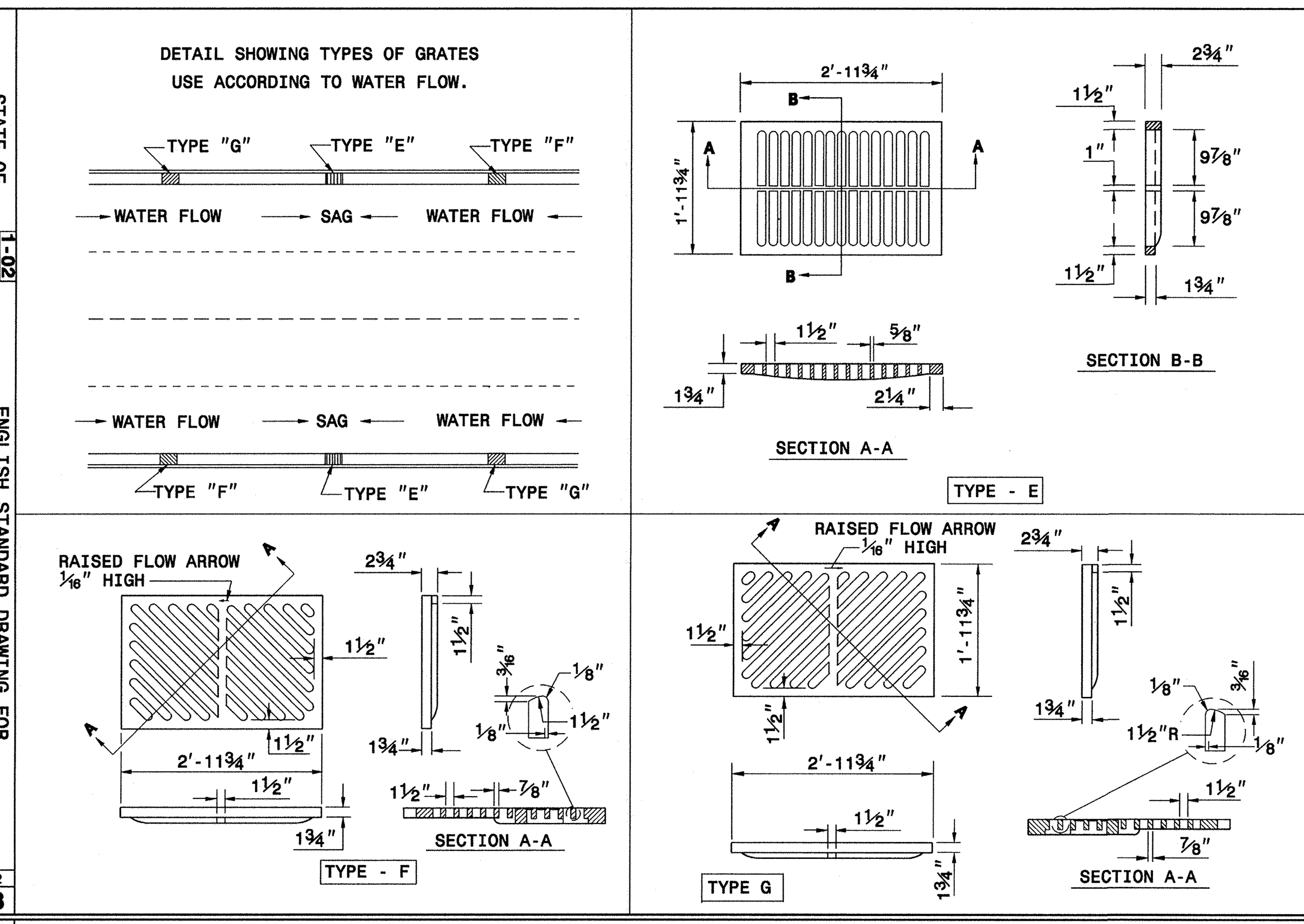

STATE OF NORTH CAROLINA DEPT. OF TRANSPORTATION DIVISION OF HIGHWAYS RALEIGH, N.C. 1-02

ENGLISH STANDARD DRAWING FOR **PRECAST DRAINAGE STRUCTURE** (SOLID AND WAFFLE WALL)

SHEET 1 OF 2 **840.45**

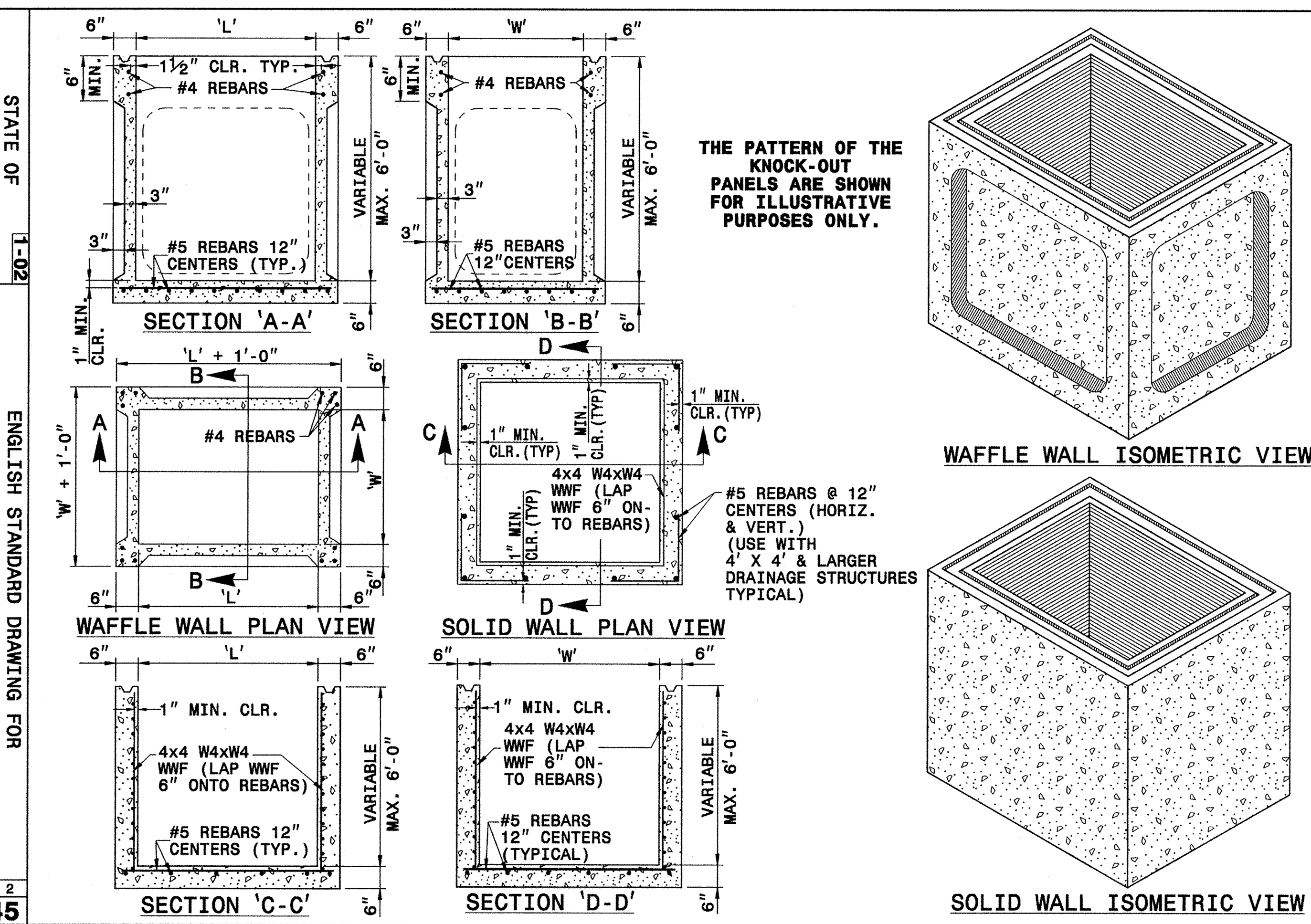

STATE OF NORTH CAROLINA DEPT. OF TRANSPORTATION DIVISION OF HIGHWAYS RALEIGH, N.C. 7-06

ENGLISH STANDARD DRAWING FOR **MANHOLE FRAME AND COVER**

SHEET 1 OF 1 **840.54**

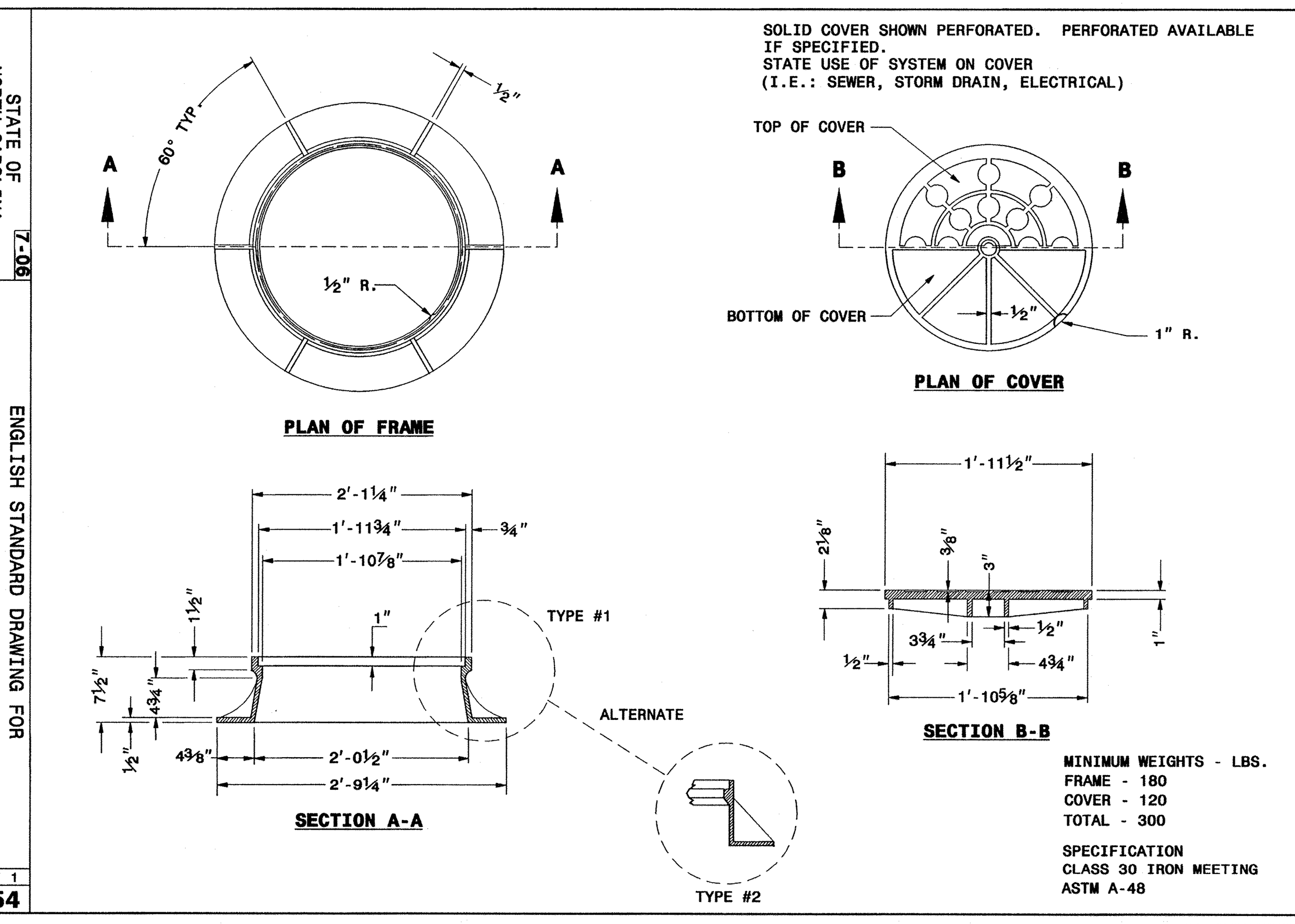

STATE OF NORTH CAROLINA DEPT. OF TRANSPORTATION DIVISION OF HIGHWAYS RALEIGH, N.C. 1-02

ENGLISH STANDARD DRAWING FOR **FRAME, GRATES, AND HOOD** FOR USE ON STANDARD CATCH BASIN

SHEET 1 OF 2 **840.03**

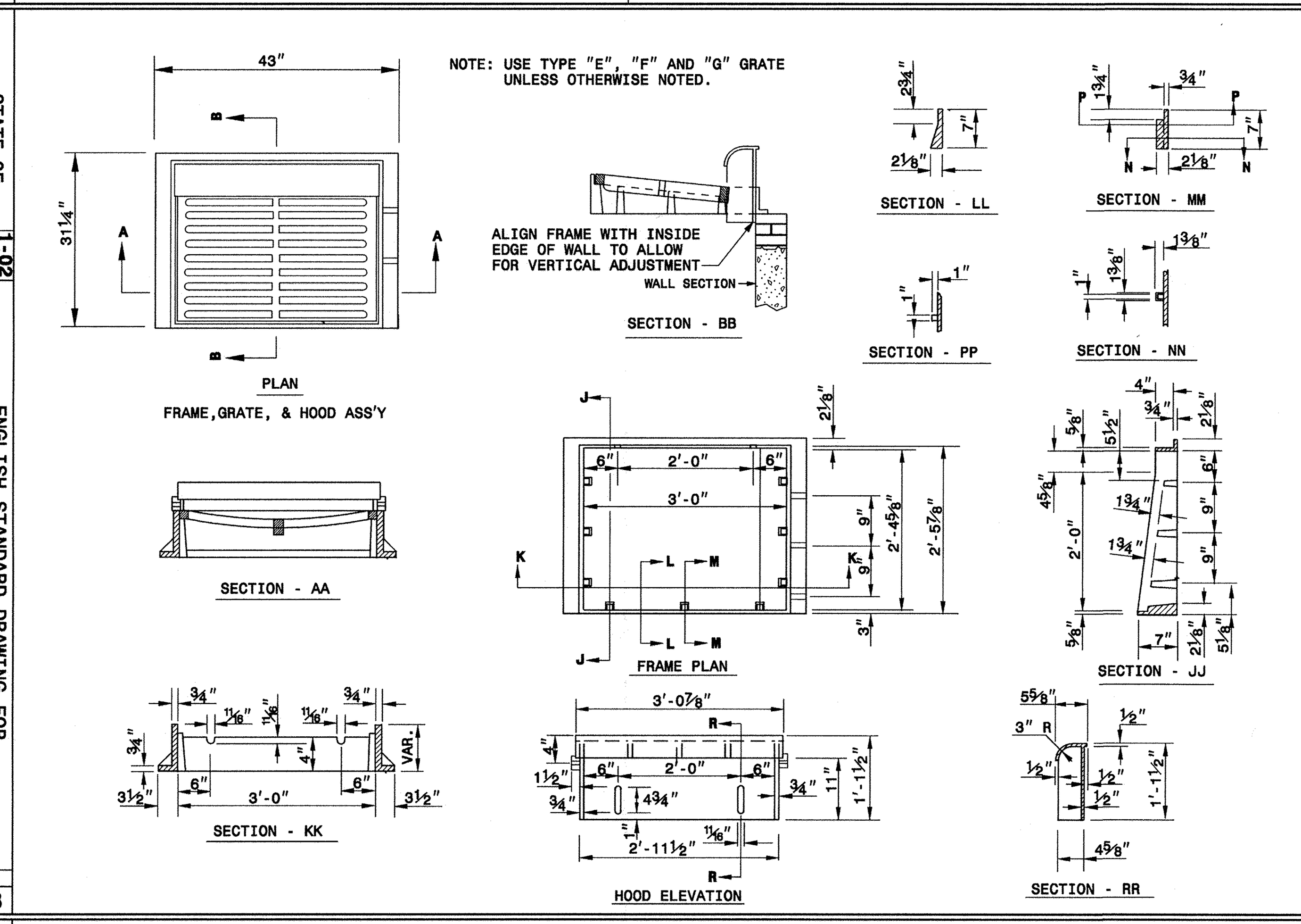

STATE OF NORTH CAROLINA DEPT. OF TRANSPORTATION DIVISION OF HIGHWAYS RALEIGH, N.C. 7-06

ENGLISH STANDARD DRAWING FOR **ANCHORAGE FOR FRAMES** BRICK OR CONCRETE

SHEET 1 OF 1 **840.25**

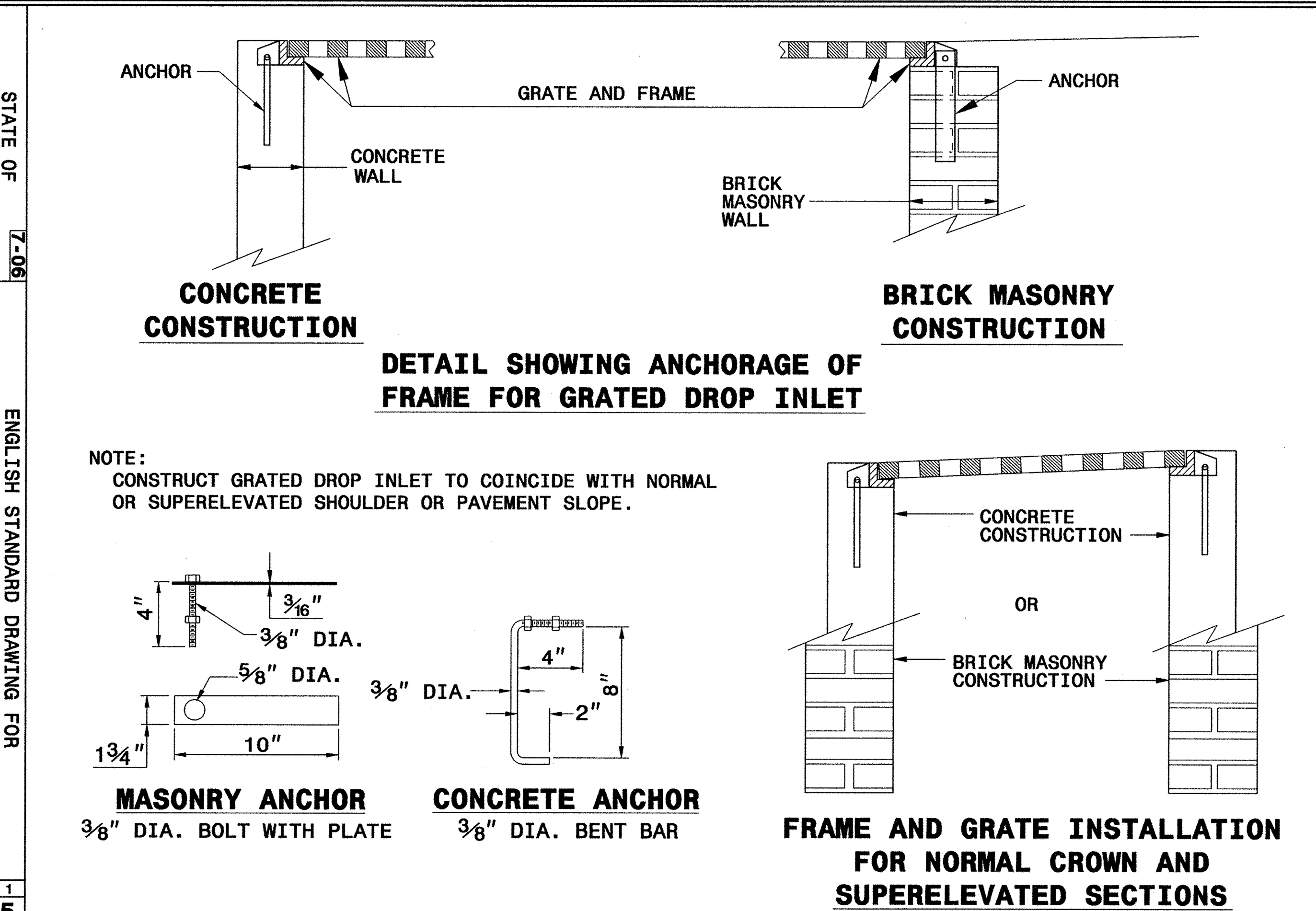

STATE OF NORTH CAROLINA DEPT. OF TRANSPORTATION DIVISION OF HIGHWAYS RALEIGH, N.C. 7-95

ENGLISH STANDARD DRAWING FOR **REINFORCED CONCRETE FLARED END SECTION** 12" THRU 48" PIPE

SHEET 1 OF 1 **310.01**

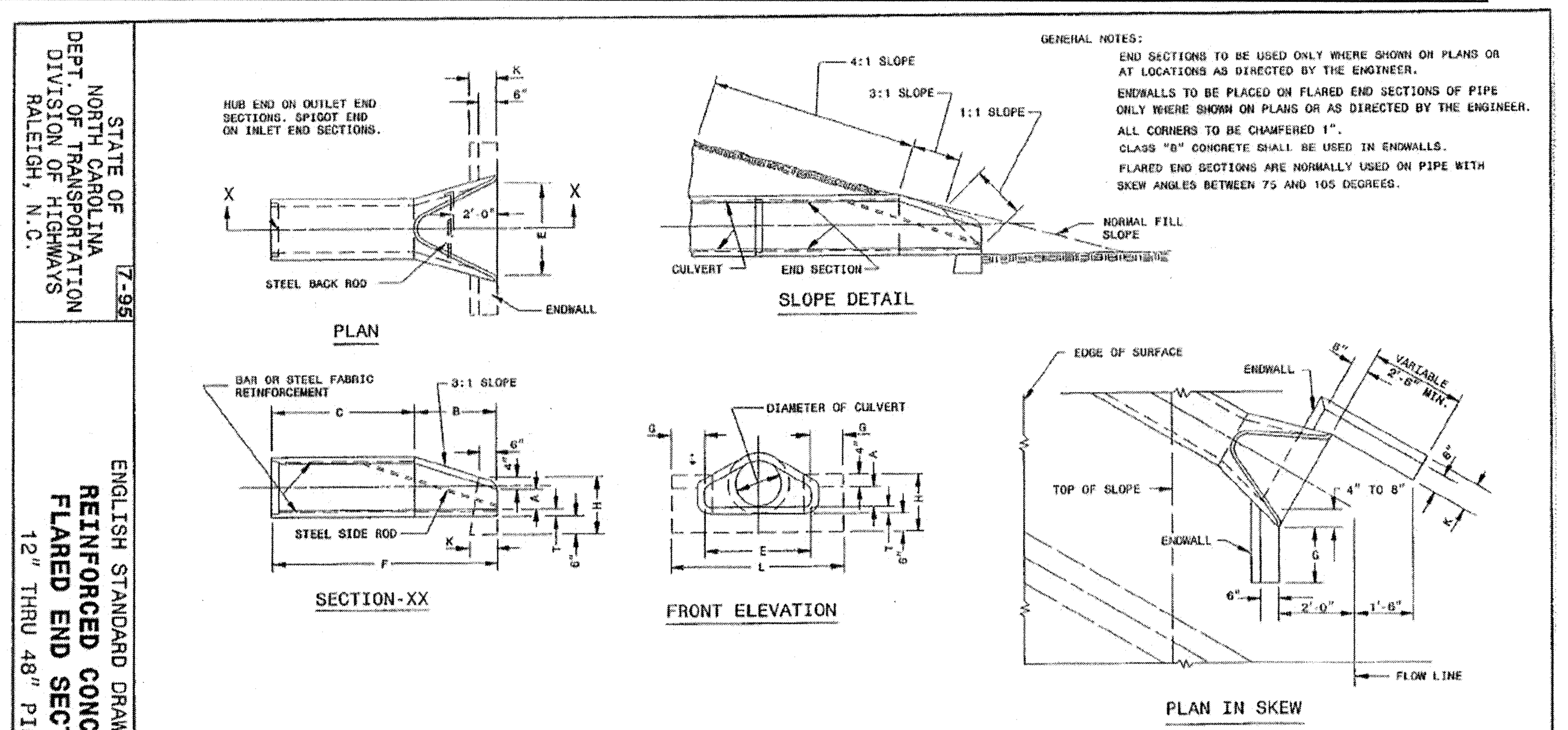

DIMENSIONS AND CONCRETE QUANTITIES FOR ENDWALL

DIA.	T	G	H	K	L	YD³	G	H	K	L	YD³
	STRAIGHT ENDWALLS						SKEWED ENDWALLS				
12"	1⅞"	1'-2"	1'-6"	0'-9"	4'-4"	0.09	1'-0"	1'-6"	0'-9"	6'-4"	0.19
15"	1⅞"	1'-2"	1'-6"	0'-9"	4'-10"	0.10	1'-0"	1'-6"	0'-9"	6'-10"	0.20
18"	2	1'-5"	1'-9"	0'-11"	5'-10"	0.16	1'-3"	1'-9"	0'-11"	7'-7"	0.26
24"	2½"	1'-8"	1'-10"	0'-11"	7'-4"	0.21	1'-5"	1'-10"	0'-11"	8'-9"	0.32
30"	2¾"	1'-11"	2'-1"	1'-1"	8'-10"	0.30	1'-8"	2'-1"	1'-1"	10'-0"	0.44
36"	3"	2'-3"	2'-5"	1'-3"	10'-6"	0.44	2'-0"	2'-5"	1'-3"	11'-4"	0.58
42"	3½"	2'-9"	2'-11"	1'-6"	12'-0"	0.71	2'-6"	2'-11"	1'-6"	12'-4"	0.91
48"	4"	3'-4"	3'-3"	1'-8"	13'-8"	0.98	3'-0"	3'-3"	1'-8"	13'-4"	1.17

RODS IN FLARED END SECTIONS

PIPE DIA.	NO. & DIM. OF RODS	REINF. LBS.	FABRIC
12"	2-#3X4'-0" SIDE RODS	3.008	18"-2X8-W2.1XW1.7
15"	2-#3X4'-0" SIDE RODS	3.008	18"-2X8-W2.1XW1.7
18"	2-#3X4'-0" SIDE RODS	3.008	18"-2X8-W2.1XW1.7
24"	2-#3X6'-0" SIDE RODS	4.512	24"-2X8-W2.9XW2.9
30"	2-#4X6'-0" SIDE RODS	8.016	30"-2X8-W4XW2.9
36"	2-#4X8'-0" SIDE RODS	10.688	42"-2X8-W4XW2.9
36"	2-#4X6'-0" BACK RODS	8.016	

END SECTION DIMENSIONS

DIA.	A	B	C	E	F
12"	4"	2'-0"	4'-0⅞"	2'-0"	6'-0⅞"
15"	6"	2'-3"	3'-10"	2'-6"	6'-1"
18"	9"	2'-3"	3'-10"	3'-0"	6'-1"
24"	9½"	3'-7½"	2'-6"	4'-0"	6'-1½"
30"	1'-0"	4'-6"	1'-7¾"	5'-0"	6'-1¾"
36"	1'-3"	5'-3"	2'-10¾"	6'-0"	8'-1¾"
42"	1'-10"	5'-3"	2'-11"	6'-6"	8'-2"
48"	2'-1"	6'-0"	2'-2"	7'-0"	8'-2"

STATE OF NORTH CAROLINA DEPT. OF TRANSPORTATION DIVISION OF HIGHWAYS RALEIGH, N.C. 1-02

ENGLISH STANDARD DRAWING FOR **PRECAST DRAINAGE STRUCTURE** (GENERAL NOTES AND DETAILS)

SHEET 2 OF 2 **840.45**

GENERAL NOTES:

* THIS PRECAST BOX MAY BE USED FOR THE FOLLOWING STANDARDS: 840.01, 840.02, 840.04, 840.05, 840.11, 840.12, 840.14, 840.15, 840.17, 840.18, 840.19, 840.26, 840.27, 840.28, 840.31, 840.32 AND 840.41.
* INSTALL PRECAST DRAINAGE STRUCTURES AND PAY FOR IN ACCORDANCE WITH SPECIFICATION SECTION 840.
* DO NOT PLACE PRECAST DRAINAGE STRUCTURES UNDER TRAFFIC OR WHERE TRAFFIC WILL BE DETOURED.
* USE 4000 PSI CONCRETE.
* PROVIDE ALL REINFORCING STEEL WHICH MEETS ASTM A615 FOR GRADE 60 AND WELDED WIRE FABRIC CONFORMING TO ASTM A185.
* LIMIT MAXIMUM DEPTH TO TOP OF BOTTOM SLAB FOR WAFFLE WALL STRUCTURE TO 10'-0"; LIMIT SOLID WALL STRUCTURE TO 15'-0".
* PLACE LIFT HOLES OR PINS IN ACCORDANCE WITH OSHA STANDARD 1926.704.
* CUT OR FORM OPENINGS FOR PIPE TO PROVIDE REQUIRED SIZE AND LOCATION. ORIENT WAFFLE WALL STRUCTURES SO THAT PIPES ENTER THROUGH THE KNOCKOUT/WAFFLE PANELS ONLY. PIPES MAY ENTER THROUGH THE CORNERS OF SOLID WALL BOXES IF A MINIMUM OF 6" OF WALL IS PROVIDED ABOVE THE HOLE.
* ALL ELEMENTS PRECAST TO MEET ASTM C913.
* FRAME AND GRATE HEIGHT MAY BE ADJUSTED WITH CONCRETE OR BRICK IN ACCORDANCE WITH STANDARD 840.25.
* PROVIDE PRECAST STRUCTURES OVER 4'-0" IN DEPTH WITH STEPS/LADDER INSTALLED IN ACCORDANCE WITH OSHA STANDARD 1910.27 AND AS FIELD CONDITIONS DICTATE.
* WELDED WIRE FABRIC MAY BE SUBSTITUTED FOR REBAR AS LONG AS THE SAME AREA OF STEEL IS PROVIDED.
* SEAL JOINTS WITH A FLEXIBLE BUTYL RUBBER BASE CONFORMING TO FEDERAL SPECIFICATION SS-S-21A, AASHTO M-198, TYPE B - BUTYL RUBBER.
* LIMIT MAXIMUM STRUCTURE SIZE TO INSIDE CLEAR DIMENSIONS OF 5'-0" X 5'-0".
* THE OUTSIDE PIPE DIAMETER PLUS 2" OR THE OPENING REQUIRED FOR FRAME AND GRATE IS THE MINIMUM STRUCTURE SIZE WHICHEVER IS GREATER.
* USE MANHOLE FRAME AND COVER AS INDICATED ON THE PLANS. REINFORCE OPENING AS SHOWN ON THIS SHEET.

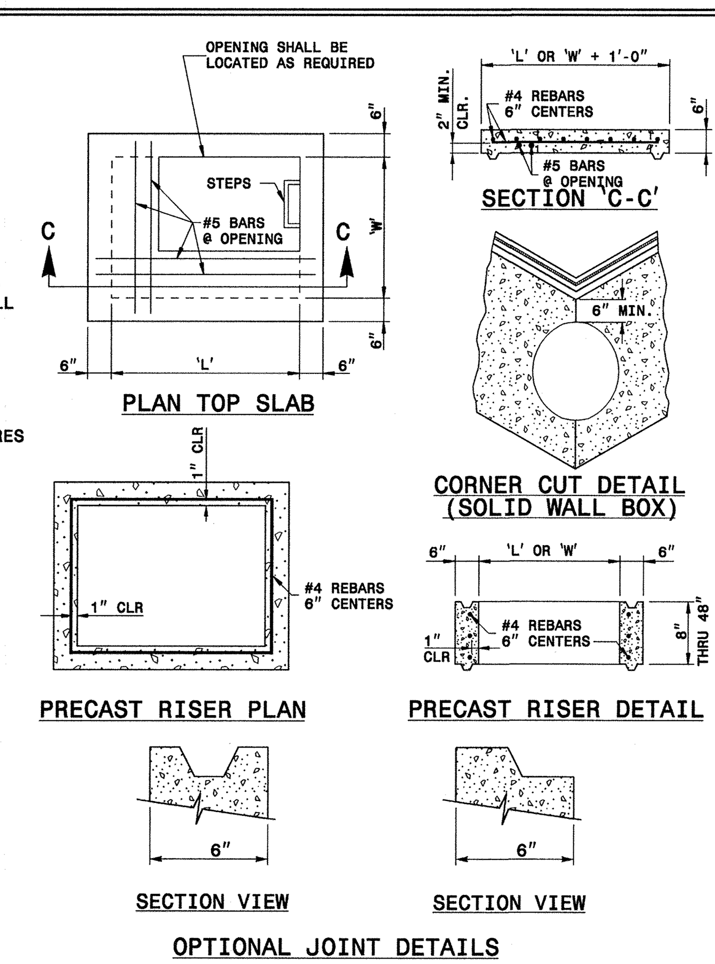

STATE OF NORTH CAROLINA DEPT. OF TRANSPORTATION DIVISION OF HIGHWAYS RALEIGH, N.C. 7-06

ENGLISH STANDARD DRAWING FOR **CONCRETE JUNCTION BOX** (WITH OPTIONAL MANHOLE) 12" THRU 66" PIPE

SHEET 1 OF 1 **840.31**

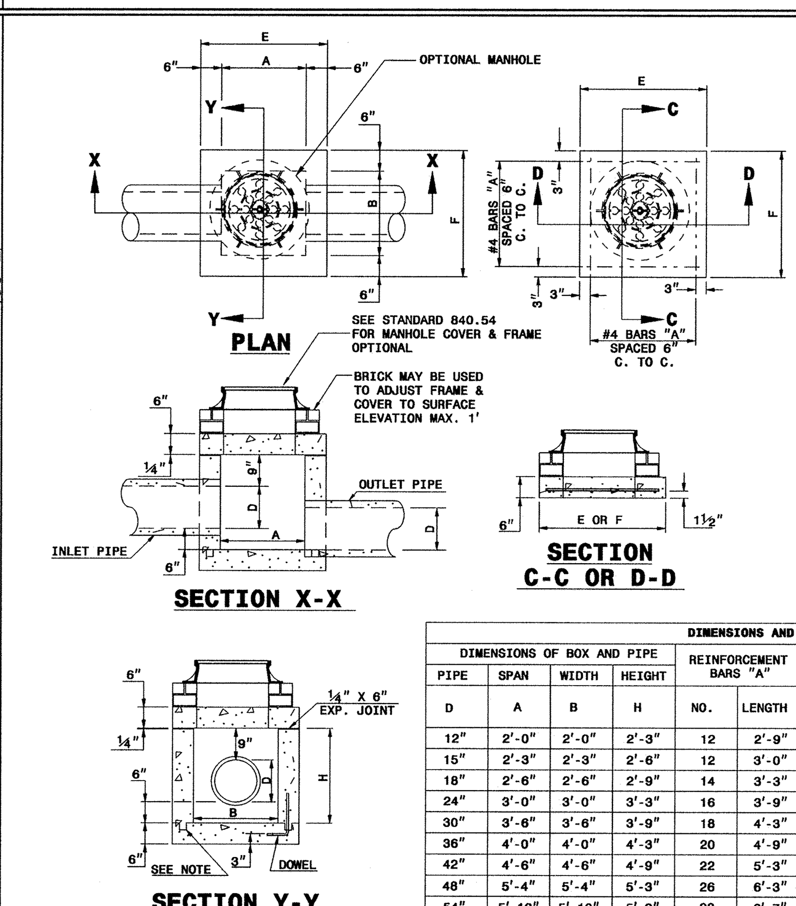

GENERAL NOTES:

CHAMFER ALL EXPOSED CORNERS 1".

USE CLASS "B" CONCRETE THROUGHOUT.

OPTIONAL CONSTRUCTION - MONOLITHIC POUR, 2" KEYWAY, OR #4 BAR DOWELS AT 12" CENTERS AS DIRECTED BY THE ENGINEER.

USE FORMS TO CONSTRUCT THE BOTTOM SLAB.

IF REINFORCED CONCRETE PIPE IS SET IN BASE SLAB OF BOX, ADD TO BASE AS SHOWN ON STANDARD NO. 840.00.

PROVIDE ALL JUNCTION BOXES OVER 3'-6" IN DEPTH WITH STEPS 12" ON CENTERS IN ACCORDANCE WITH STD. NO. 840.66.

ADJUST THE STEEL, CONCRETE AND BRICK MASONRY QUANTITIES TO INCLUDE THE ADDITION OF THE MANHOLE (I.E. DIAGONAL BARS SHORTENED AROUND OPENING IN TOP SLAB, ADDITIONAL VARIABLE HEIGHT BRICK MASONRY, OPENING IN TOP SLAB.)

MAX. DEPTH OF THIS STRUCTURE FROM TOP OF BOTTOM SLAB TO TOP ELEVATION IS 12 FEET.

DIMENSIONS AND QUANTITIES FOR CONCRETE JUNCTION BOXES

DIMENSIONS OF BOX AND PIPE				REINFORCEMENT BARS "A"		TOP SLAB DIMENSIONS		CUBIC YARDS IN BOX			TOTAL QUANTITIES BOX AND SLABS		DEDUCTIONS FOR ONE PIPE CU.YDS.	
PIPE	SPAN	WIDTH	HEIGHT											
D	A	B	H	NO.	LENGTH	E	F	TOP SLAB	BOTTOM SLAB	WALL/ FT. OF HT.	LBS. REINF	CU. YDS. MIN. "H"	C.S.	R.C.
12"	2'-0"	2'-0"	2'-3"	12	2'-9"	3'-0"	3'-0"	0.167	0.167	0.185	22	0.750	0.015	0.024
15"	2'-3"	2'-3"	2'-6"	12	3'-0"	3'-3"	3'-3"	0.196	0.196	0.204	24	0.902	0.023	0.036
18"	2'-6"	2'-6"	2'-9"	14	3'-3"	3'-6"	3'-6"	0.227	0.227	0.222	30	1.065	0.033	0.049
24"	3'-0"	3'-0"	3'-3"	16	3'-9"	4'-0"	4'-0"	0.296	0.296	0.259	40	1.434	0.059	0.085
30"	3'-6"	3'-6"	3'-9"	18	4'-3"	4'-6"	4'-6"	0.375	0.375	0.296	51	1.860	0.092	0.127
36"	4'-0"	4'-0"	4'-3"	20	4'-9"	5'-0"	5'-0"	0.463	0.463	0.333	64	2.341	0.132	0.178
42"	4'-6"	4'-6"	4'-9"	22	5'-3"	5'-6"	5'-6"	0.560	0.560	0.370	77	2.878	0.180	0.243
48"	5'-4"	5'-4"	5'-3"	26	6'-3"	6'-4"	6'-4"	0.743	0.743	0.407	111	3.623	0.235	0.317
54"	5'-10"	5'-10"	5'-9"	28	6'-7"	6'-10"	6'-10"	0.865	0.865	0.444	126	4.283	0.297	0.401
60"	6'-6"	6'-6"	6'-3"	30	7'-3"	7'-6"	7'-6"	1.042	1.042	0.481	145	5.090	0.367	0.495
66"	7'-1"	7'-1"	6'-9"	32	7'-10"	8'-1"	8'-1"	1.210	1.210	0.518	169	5.917	0.444	0.589

ALL CONSTRUCTION TO BE IN ACCORDANCE WITH ALL TOWN OF PITTSBORO AND/OR NCDOT STANDARDS AND SPECIFICATIONS.

SURVEY NOTE:

ALL EXISTING SITE AND TOPOGRAPHIC INFORMATION SHOWN BASED ON AN ALTA/ACSM LAND TITLE SURVEY DATED FEBRUARY 15, 2013. PROVIDED BY WHITHERS & RAVENEL. 115 MACKENAN DR, CARY NC 27511. PHONE 919-469-3340

No.	REVISIONS	DATE	BY
2	REVISED PER TOWN OF PITTSBORO 2ND COMMENTS	7/16/14	BTO
1	REVISED PER TOWN OF PITTSBORO 1ST COMMENTS	5/21/14	WJB

Kimley»Horn

© 2014 KIMLEY-HORN AND ASSOCIATES, INC.

333 FAYETTEVILLE STREET, SUITE 600, RALEIGH, NC 27601
PHONE: 919-835-1494 FAX: 919-653-5847
WWW.KIMLEY-HORN.COM

KHA PROJECT 012325022
DATE 01/28/2014
SCALE AS SHOWN
DESIGNED BY BTO
DRAWN BY KCG
CHECKED BY WJB

CHATHAM MEDICAL OFFICE BUILDING

PREPARED FOR

CHATHAM PARK INVESTORES LLC

PITTSBORO NC

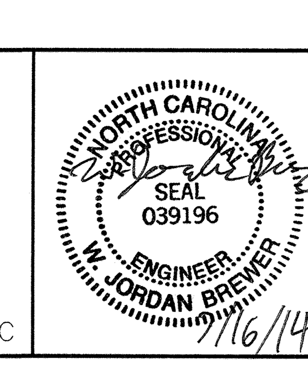

STORM DRAINAGE DETAILS

SHEET NUMBER C-702

Plotted By: Brewer, Jordan Sheet Set: Chatham Medical Office Building Layout: C-702 STORM DRAINAGE DETAILS July 15, 2014 08:50:09pm K:\RDT_LDEV\012325022_Chatham MOB\Planning Phase\15_CAD Files\PlanSheets\C-702 STORM DRAINAGE DETAILS.dwg
This document, together with the concepts and designs presented herein, as an instrument of service, is intended only for the specific purpose and client for which it was prepared. Reuse of and improper reliance on this document without written authorization and adaptation by Kimley-Horn and Associates, Inc. shall be without liability to Kimley-Horn and Associates, Inc.

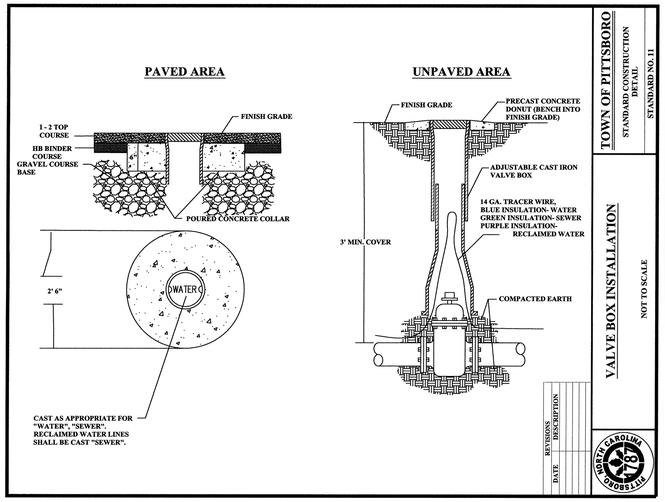

VALVE BOX INSTALLATION

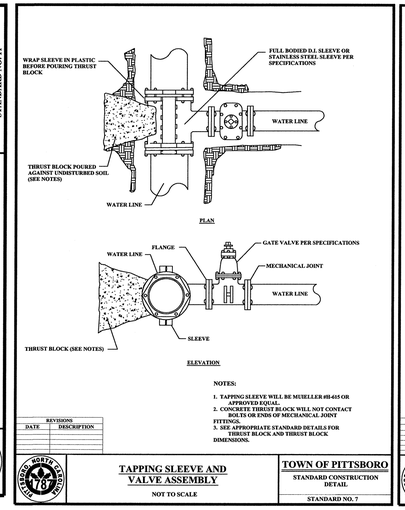

TAPPING SLEEVE AND VALVE ASSEMBLY

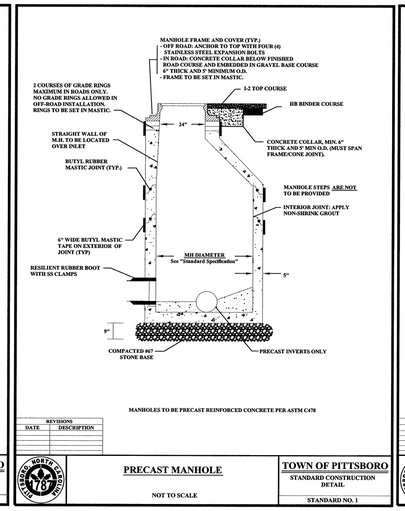

PRECAST MANHOLE

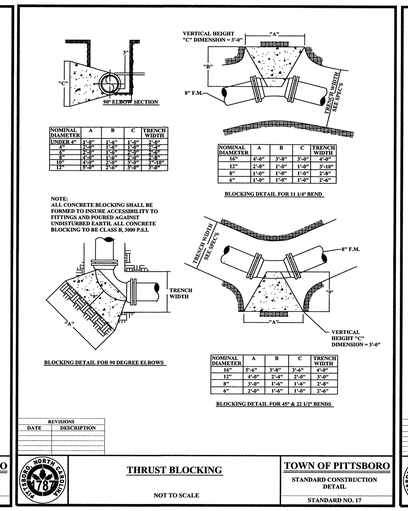

NOMINAL DIAMETER	A	B	C	TRENCH WIDTH
16"	3'-6"	3'-6"	3'-6"	3'-6"
14"	3'-0"	3'-0"	3'-0"	3'-0"
12"	2'-6"	2'-6"	2'-6"	2'-6"
10"	2'-0"	2'-0"	2'-0"	2'-0"

NOMINAL DIAMETER	A	B	C	TRENCH WIDTH
16"	4'-6"	3'-8"	3'-8"	4'-6"
12"	2'-6"	1'-8"	1'-8"	3'-10"
8"	1'-6"	1'-6"	1'-6"	2'-6"
6"	1'-6"	1'-6"	1'-6"	2'-6"

BLOCKING DETAIL FOR 11 1/4° BEND

NOMINAL DIAMETER	A	B	C	TRENCH WIDTH
16"	5'-6"	3'-8"	3'-6"	4'-6"
12"	4'-0"	2'-4"	2'-0"	3'-0"
8"	3'-0"	1'-6"	1'-6"	2'-8"
6"	2'-0"	1'-6"	1'-0"	2'-4"

BLOCKING DETAIL FOR 45° & 22 1/2° BENDS

THRUST BLOCK

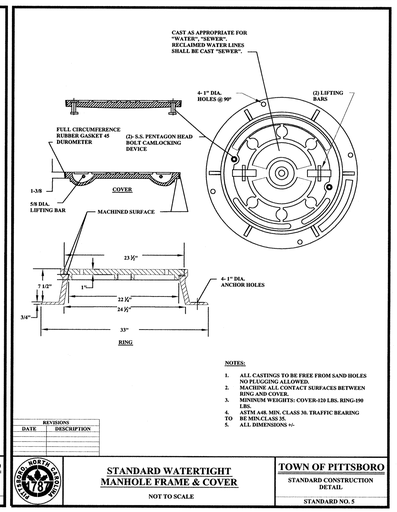

STANDARD WATERTIGHT MANHOLE FRAME & COVER

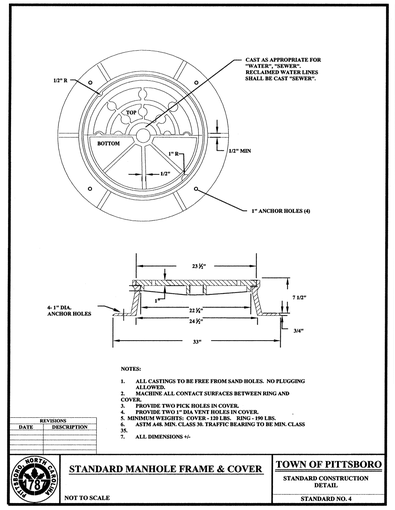

STANDARD MANHOLE FRAME & COVER

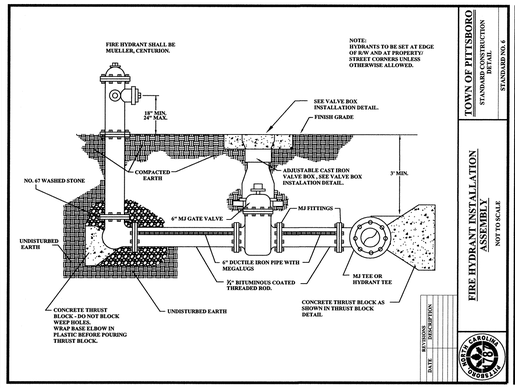

FIRE HYDRANT INSTALLATION ASSEMBLY

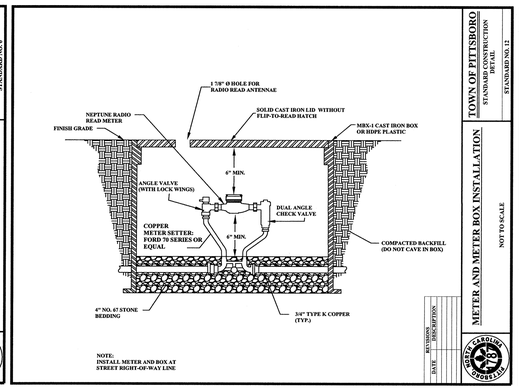

METER AND METER BOX ASSEMBLY

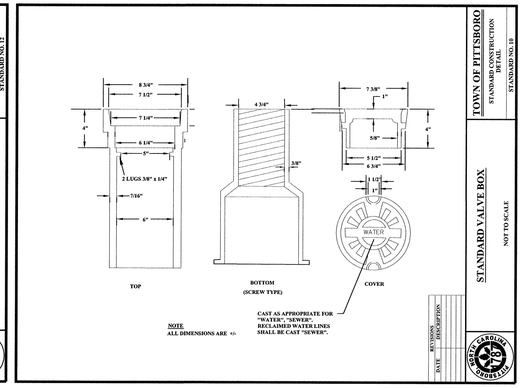

STANDARD VALVE BOX

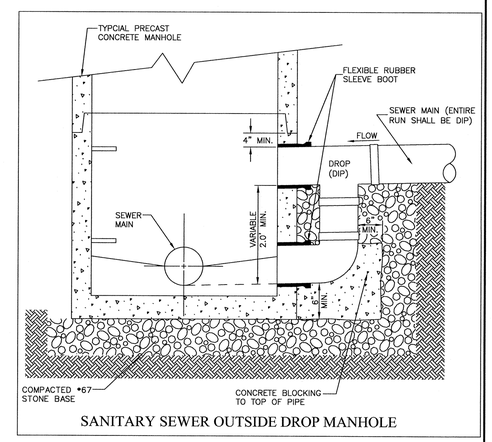

SANITARY SEWER OUTSIDE DROP MANHOLE

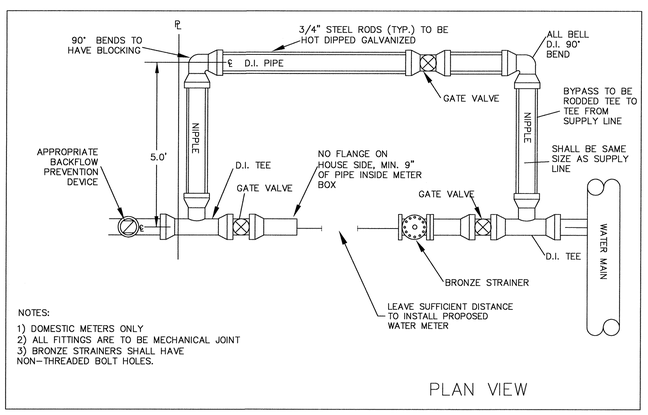

DOMESTIC WATER METER BYPASS INSTALLATION

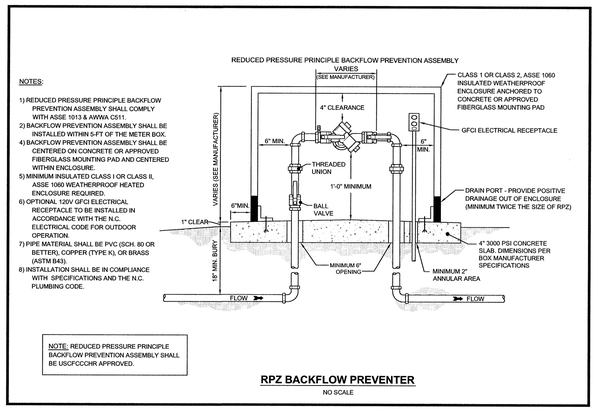

RPZ BACKFLOW PREVENTER
NO SCALE

ALL CONSTRUCTION TO BE IN ACCORDANCE WITH ALL TOWN OF PITTSBORO AND/OR NCDOT STANDARDS AND SPECIFICATIONS.

SURVEY NOTE:

ALL EXISTING SITE AND TOPOGRAPHIC INFORMATION SHOWN BASED ON AN ALTA/ACSM LAND TITLE SURVEY DATED FEBRUARY 15, 2013. PROVIDED BY WHITHERS & RAVENEL. 115 MACKENAN DR, CARY NC 27511. PHONE 919-469-3340

No.	REVISIONS	DATE	BY
5	REVISED PER TOWN OF PITTSBORO 3RD COMMENTS	7/30/14	KCG
4	NCDENR EXPRESS REVIEW COMMENTS	7/25/14	KCG
3	NCDENR EXPRESS REVIEW COMMENTS	7/18/14	KCG
2	REVISED PER TOWN OF PITTSBORO 2ND COMMENTS	7/16/14	BTO
1	REVISED PER TOWN OF PITTSBORO 1ST COMMENTS	5/21/14	WJB

Kimley»Horn

© 2014 KIMLEY-HORN AND ASSOCIATES, INC.

333 FAYETTEVILLE STREET, SUITE 600, RALEIGH, NC 27601
PHONE: 919-835-1494 FAX: 919-653-5847
WWW.KIMLEY-HORN.COM

KHA PROJECT	012325022
DATE	01/28/2014
SCALE	AS SHOWN
DESIGNED BY	BTO
DRAWN BY	KCG
CHECKED BY	WJB

CHATHAM MEDICAL OFFICE BUILDING

PREPARED FOR

CHATHAM PARK INVESTORS LLC

PITTSBORO NC

NORTH CAROLINA PROFESSIONAL SEAL 039196 ENGINEER WILLIAM JORDAN BREWER 7/30/14

UTILITY DETAILS

SHEET NUMBER

C-800

Plotted By:Gernhart, Craig Sheet Set:Chatham Medical Office Building Layout:C-800 UTILITY DETAILS July 30, 2014 11:23:42am K:\RDT_LDEV\012325022_chatham medclinic phase\15 cad files\plansheets\C- 701 UTILITY DETAILS.dwg
This document, together with the concepts and designs presented herein, as an instrument of service, is intended only for the specific purpose and client for which it was prepared. Reuse of and improper reliance on this document without written authorization and adaptation by Kimley-Horn and Associates, Inc. shall be without liability to Kimley-Horn and Associates, Inc.

CHANNEL INSTALLATION

NORTH AMERICAN GREEN

EROSION CONTROL *Products*
Guaranteed SOLUTIONS

14649 HIGHWAY 41 NORTH
EVANSVILLE, IN 47725
800-772-2040
www.nagreen.com

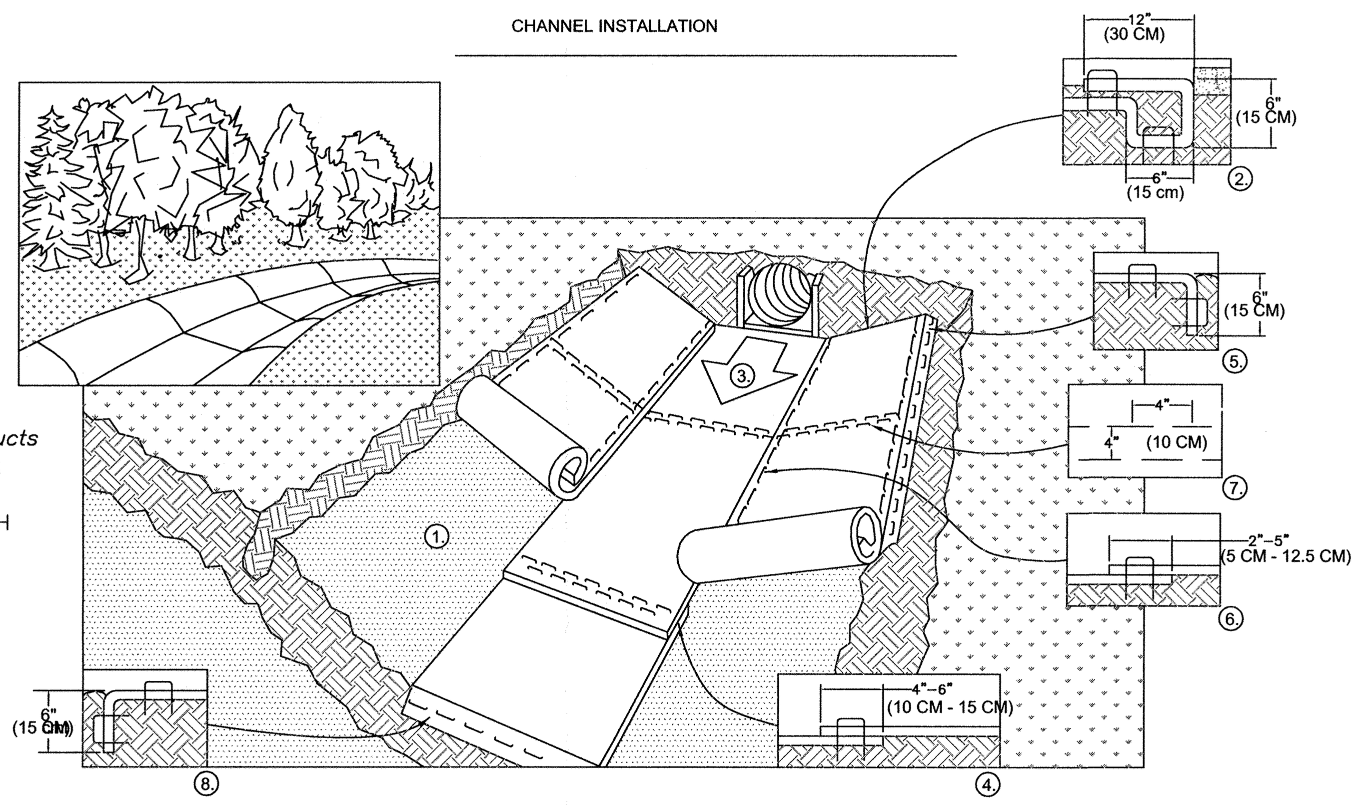

1. PREPARE SOIL BEFORE INSTALLING ROLLED EROSION CONTROL PRODUCTS (RECP's), INCLUDING ANY NECESSARY APPLICATION OF LIME, FERTILIZER, AND SEED. NOTE: WHEN USING CELL-O-SEED DO NOT SEED PREPARED AREA. CELL-O-SEED MUST BE INSTALLED WITH PAPER SIDE DOWN.
2. BEGIN AT THE TOP OF THE CHANNEL BY ANCHORING THE RECP's IN A 6" (15 CM) DEEP X 6" (15 CM) WIDE TRENCH WITH APPROXIMATELY 12" (30 CM) OF RECP's EXTENDED BEYOND THE UP-SLOPE PORTION OF THE TRENCH. ANCHOR THE RECP's WITH A ROW OF STAPLES/STAKES APPROXIMATELY 12" (30 CM) APART IN THE BOTTOM OF THE TRENCH. BACKFILL AND COMAPCT THE TRENCH AFTER STAPLING. APPLY SEED TO COMPACTED SOIL AND FOLD REMAINING 12" (30 CM) PORTION OF RECP's BACK OVER SEED AND COMPACTED SOIL. SECURE RECP's OVER COMPACTED SOIL WITH A ROW OF STAPLES/STAKES SPACED APPROXIMATELY 12" (30 CM) ACROSS THE WIDTH OF THE RECP's.
3. ROLL CENTER RECP's IN DIRECTION OF WATER FLOW IN BOTTOM OF CHANNEL. RECP's WILL UNROLL WITH APPROPRIATE SIDE AGAINST THE SOIL SURFACE. ALL RECP's MUST BE SECURELY FASTENED TO SOIL SURFACE BY PLACING STAPLES/STAKES IN APPROPRIATE LOCATIONS AS SHOWN IN THE STAPLE PATTERN GUIDE. WHEN USING THE DOT SYSTEM™, STAPLES/STAKES SHOULD BE PLACED THROUGH EACH OF THE COLORED DOTS CORRESPONDING TO THE APPROPRIATE STAPLE PATTERN.
4. PLACE CONSECUTIVE RECP's END OVER END (SHINGLE STYLE) WITH A 4" - 6" (10 CM -15 CM) OVERLAP. USE A DOUBLE ROW OF STAPLES STAGGERED 4" (10 CM) APART AND 4" (10 CM) ON CENTER TO SECURE RECP's.
5. FULL LENGTH EDGE OF RECP's AT TOP OF SIDE SLOPES MUST BE ANCHORED WITH A ROW OF STAPLES/STAKES APPROXIMATELY 12" (30 CM) APART IN A 6" (15 CM) DEEP X 6" (15 CM) WIDE TRENCH. BACKFILL AND COMPACT THE TRENCH AFTER STAPLING.
6. ADJACENT RECP's MUST BE OVERLAPPED APPROXIMATELY 2" - 5" (5 CM -12.5 CM) (DEPENDING ON RECP's TYPE) AND STAPLED.
7. IN HIGH FLOW CHANNEL APPLICATIONS, A STAPLE CHECK SLOT IS RECOMMENDED AT 30 TO 40 FOOT (9 M - 12 M) INTERVALS. USE A DOUBLE ROW OF STAPLES STAGGERED 4" (10 CM) APART AND 4" (10 CM) ON CENTER OVER ENTIRE WIDTH OF THE CHANNEL.
8. THE TERMINAL END OF THE RECP's MUST BE ANCHORED WITH A ROW OF STAPLES/STAKES APPROXIMATELY 12" (30 CM) APART IN A 6" (15 CM) DEEP X 6" (15 CM) WIDE TRENCH. BACKFILL AND COMPACT THE TRENCH AFTER STAPLING.

NOTE:
* IN LOOSE SOIL CONDITIONS, THE USE OF STAPLE OR STAKE LENGTHS GREATER THAN 6" (15 CM) MAY BE NECESSARY TO PROPERLY ANCHOR THE RECP's.

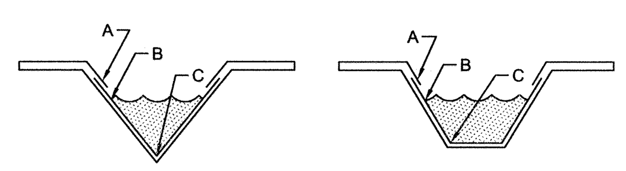

CRITICAL POINTS
A. OVERLAPS AND SEAMS
B. PROJECTED WATER LINE
C. CHANNEL BOTTOM/SIDE SLOPE VERTICES

NOTE:
* HORIZONTAL STAPLE SPACING SHOULD BE ALTERED IF NECESSARY TO ALLOW STAPLES TO SECURE THE CRITICAL POINTS ALONG THE CHANNEL SURFACE.

** IN LOOSE SOIL CONDITIONS, THE USE OF STAPLE OR STAKE LENGTHS GREATER THAN 6" (15 cm) MAY BE NECESSARY TO PROPERLY ANCHOR THE RECP's.

REV. 01/05

TRAPEZOIDAL CHANNEL
NTS

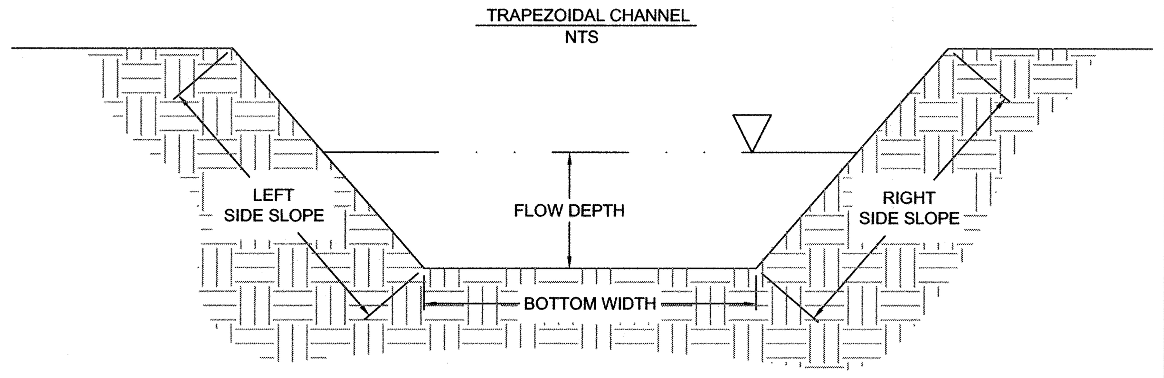

	TOTAL FLOW (CFS)	SLOPE (%)	BOTTOM WIDTH (FT)	RIGHT SLOPE (H:V)	LEFT SLOPE (H:V)	FLOW DEPTH (FT)	LINER
DIV #1	10.0	0.6	1	3:1	3:1	0.86	NAG SC150
TP #1	6.79	5.5	2.5	3:1	3:1	0.41	NAG SC150
TP #2	1.84	6.3	2.5	3:1	3:1	0.19	NAG SC150

MAINTENANCE REQUIREMENTS

1. MOWING WILL BE ACCOMPLISHED AS NEEDED ACCORDING TO THE SEASON. GRASS HEIGHT WILL NOT EXCEED SIX INCHES AT ANY TIME; AND GRASS WILL NOT BE MOWED TOO CLOSE TO THE GROUND OR "SCALPED".
2. SWALES WILL BE INSPECTED MONTHLY OR AFTER EVERY RUNOFF PRODUCING RAINFALL EVENT FOR SEDIMENT BUILD-UP, EROSION, AND TRASH ACCUMULATION.
3. ACCUMULATED SEDIMENT AND TRASH WILL BE REMOVED AS NECESSARY. SWALES WILL BE RESEEDED OR SODDED FOLLOWING SEDIMENT REMOVAL.
4. ERODED AREAS OF THE SWALES WILL BE REPAIRED AND RESEEDED. SWALES WILL BE REVEGETATED AS NEEDED AND IN A TIMELY MANNER BASED ON THE MONTHLY INSPECTIONS. SIDE SLOPES MUST BE MAINTAINED AT THE PERMITTED SLOPE.
5. CATCH BASINS, CURB CUTS, VELOCITY REDUCTION DEVICES, AND PIPING WILL BE INSPECTED MONTHLY OR AFTER EVERY SIGNIFICANT RUNOFF PRODUCING RAINFALL EVENT. TRASH AND DEBRIS WILL BE CLEARED FROM GRATES, CURB CUTS, VELOCITY REDUCTION DEVICES, AND PIPING.

NOTES:
a. 2" – 3" WASHED STONE SHALL BE USED. PAD TO BE 100'L X 20'W X 6"D AT A MINIMUM.
b. TURNING RADIUS SUFFICIENT TO ACCOMMODATE LARGE TRUCKS IS TO BE PROVIDED.
c. ENTRANCE(S) SHOULD BE LOCATED TO PROVIDE FOR MAXIMUM UTILITY BY ALL CONSTRUCTION VEHICLES.
d. MUST BE MAINTAINED IN A CONDITION WHICH WILL PREVENT TRACKING OR DIRECT FLOW OF MUD ONTO STREETS. PERIODIC TOPDRESSING WITH STONE SHALL BE NECESSARY; KEEP SOME HANDY.
e. ANY MATERIAL WHICH STILL MAKES IT ONTO THE ROAD MUST BE CLEANED UP IMMEDIATELY.
f. PLACE FRESH STONE ON CONSTRUCTION ENTRANCE WHEN SEDIMENTS AND MUD ACCUMULATE.

MAINTENANCE NOTE:

MAINTAIN THE GRAVEL PAD IN A CONDITION TO PREVENT MUD OR SEDIMENT FROM LEAVING THE CONSTRUCTION SITE. THIS MAY REQUIRE PERIODIC TOPDRESSING WITH 2-INCH STONE. AFTER EACH RAINFALL, INSPECT ANY STRUCTURE USED TO TRAP SEDIMENT AND CLEAN IT OUT AS NECESSARY. IMMEDIATELY REMOVE ALL OBJECTIONABLE MATERIALS SPILLED, WASHED, OR TRACKED ONTO PUBLIC ROADWAYS.

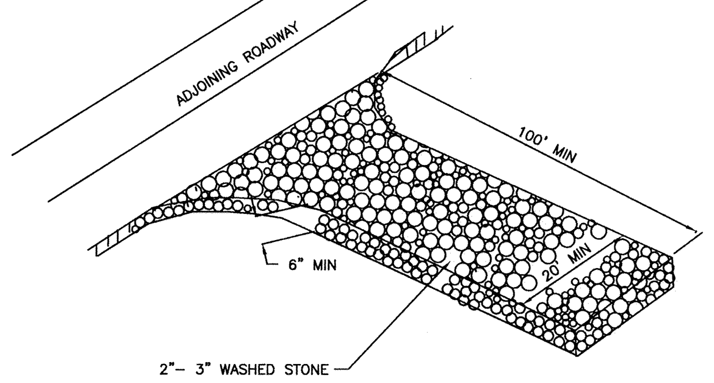

NOTES: APPLICABLE AT ALL POINTS OF INGRESS & EGRESS UNTIL SITE IS STABILIZED, FREQUENT CHECKS OF THE DEVICE AND TIMELY MAINTENANCE MUST BE PROVIDED.

TEMPORARY CONSTRUCTION ENTRANCE/EXIT
NOT TO SCALE

NOTE: ALL PARTIALLY COMPLETED STORM DRAINS SHALL BE PROTECTED AT THE END OF EACH DAY IN ACCORDANCE WITH THESE DETAILS.

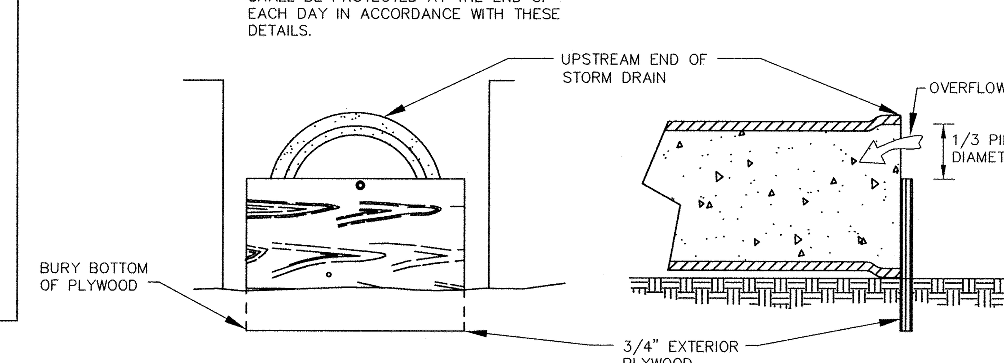

PLYWOOD INLET PROTECTION

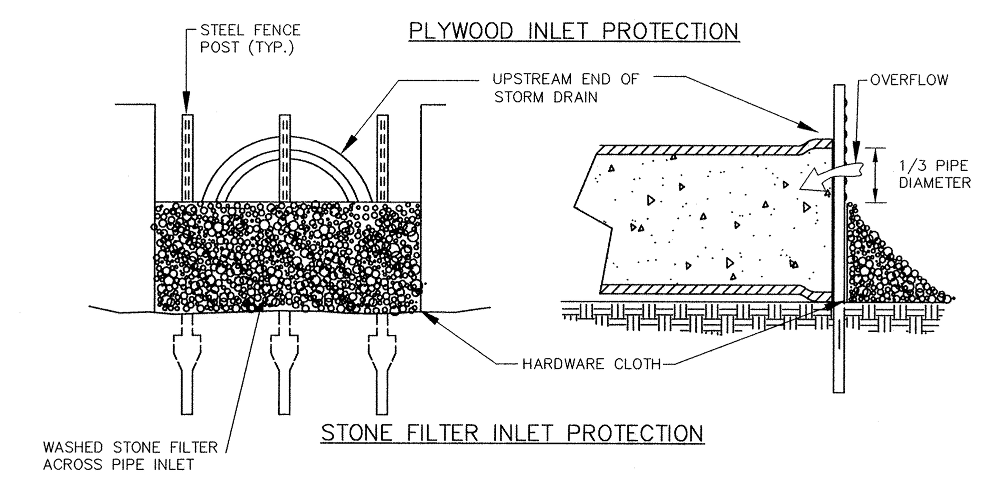

STONE FILTER INLET PROTECTION

PIPE INLET PROTECTION
NOT TO SCALE

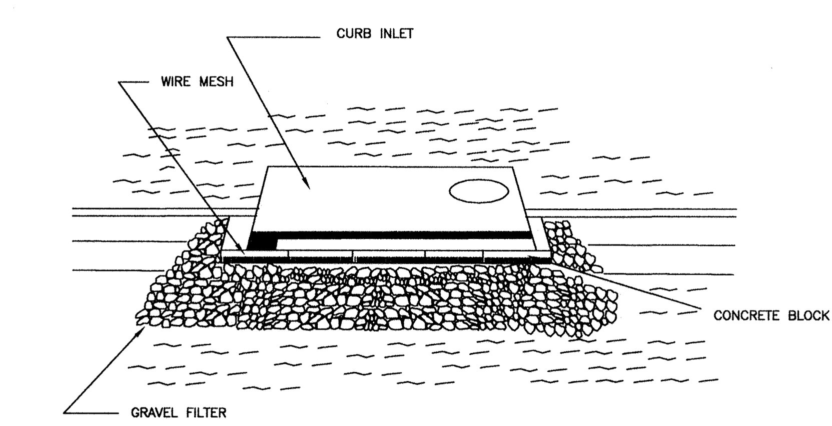

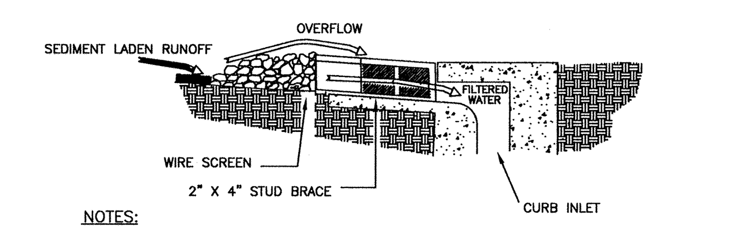

NOTES:
1. TWO CONCRETE BLOCKS SHALL BE PLACED ON THEIR SIDES ABUTTING THE CURB AT THEIR SIDE OF THE INLET OPENING. A 2"X4" STUD SHALL BE CUT AND PLACED THROUGH THE OUTER HOLES OF THE SPACER BLOCKS TO BRACE THE FRONT BLOCKS. FRONT BLOCKS ARE PLACED ON THEIR SIDES ACROSS THE INLET AND ABUTTING THE SPACER BLOCKS.
2. HARDWARE CLOTH OR COMPARABLE WIRE MESH WITH 1/2" OPENINGS SHALL BE PLACED OVER THE OUTSIDE VERTICAL FACE (WEBBING) OF THE BLOCKS TO PREVENT FILTER STONE FROM BEING WASHED THROUGH HOLES IN THE BLOCK.
3. WASHED STONE PER STATE AND LOCAL SPECIFICATIONS SHALL BE PILED AGAINST THE WIRE TO THE TOP OF THE BLOCK.
4. CHECK DEVICE AFTER EACH RAIN. REPLACE WASHED STONE IF IT CLOGS WITH SEDIMENT.
5. APPLICABLE AT CURB INLETS WHERE AN OVERFLOW CAPABILITY IS NECESSARY TO PREVENT EXCESSIVE PONDING IN FRONT OF THE INLET.

MAINTENANCE NOTES:
a. INSPECT THE BARRIER AT LEAST WEEKLY AND AFTER EACH SIGNIFICANT (½" OR GREATER) RAINFALL AND MAKE REPAIRS AS NEEDED.
b. REMOVE SEDIMENT AS NECESSARY TO PROVIDE ADEQUATE STORAGE VOLUME FOR SUBSEQUENT RAINS.
c. WHEN THE CONTRIBUTING DRAINAGE AREA HAS BEEN STABILIZED, REMOVE ALL MATERIALS AND ANY UNSTABLE SOIL, AND EITHER SALVAGE OR DISPOSE OF IT PROPERLY. BRING THE DISTURBED AREA TO PROPER GRADE, THEN SMOOTH AND COMPACT IT. APPROPRIATELY STABILIZE ALL BARE AREAS AROUND THE INLET.

BLOCK AND GRAVEL CURB INLET SEDIMENT FILTER
NOT TO SCALE

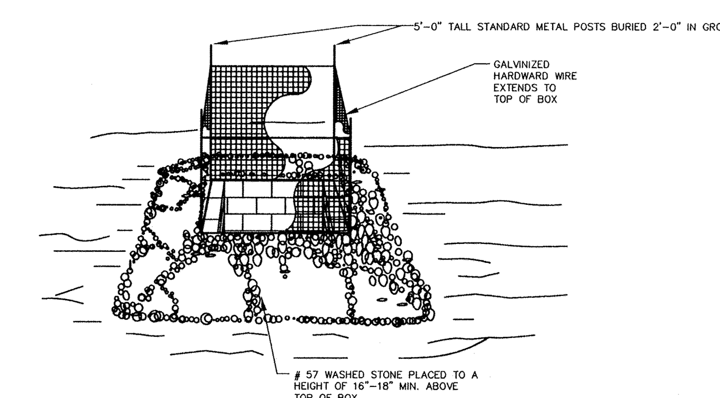

NOTE: TO BE INSTALLED AROUND ALL CURB INLETS UNTIL CURB IS POURED.

MAINTENANCE NOTE:

INSPECT INLETS AT LEAST WEEKLY AND AFTER EACH SIGNIFICANT (½" OR GREATER) RAINFALL EVENT. CLEAR THE MESH WIRE OF ANY DEBRIS OR OTHER OBJECTS TO PROVIDE ADEQUATE FLOW FOR SUBSEQUENT RAINS. TAKE CARE NOT TO DAMAGE OR UNDERCUT THE WIRE MESH DURING SEDIMENT REMOVAL. REPLACE STONE AS NEEDED.

INSTALLATION OF FABRIC AND SUPPORTING FRAME FOR INLET PROTECTION.
NOT TO SCALE

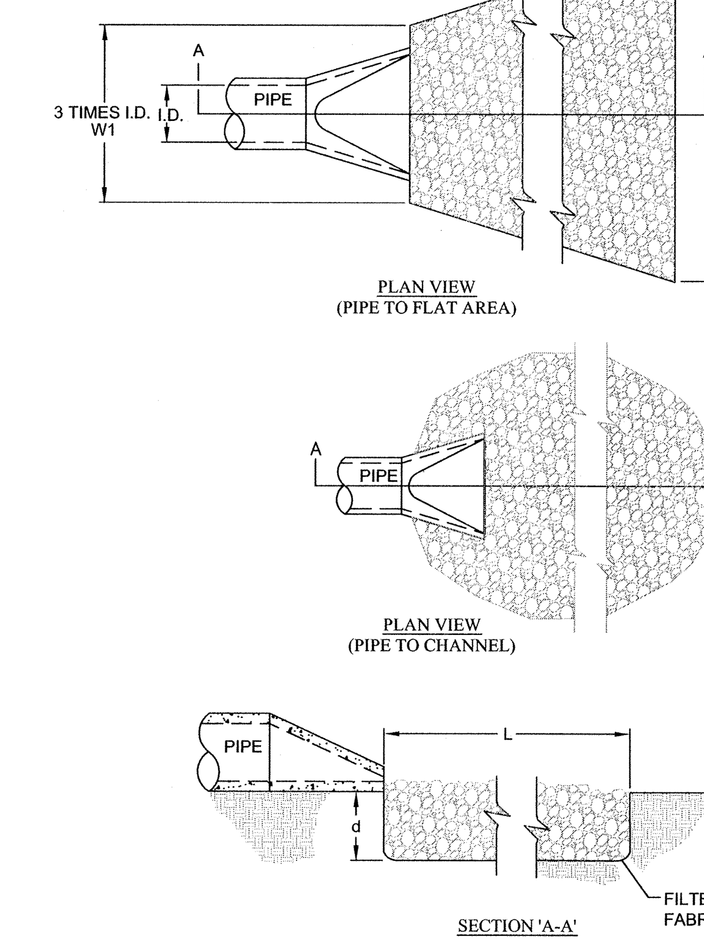

NOTES:
1. L = THE LENGTH OF THE RIPRAP APRON.
2. d = 1.5 TIMES THE MAXIMUM STONE DIAMETER BUT NOT LESS THAN 6" (INCHES).
3. A FILTER BLANKET OR FILTER FABRIC SHOULD BE INSTALLED BETWEEN THE RIPRAP AND SOIL FOUNDATION.
4. IN A WELL-DEFINED CHANNEL EXTEND THE APRON UP THE CHANNEL BANKS TO AN ELEVATION OF 6" ABOVE THE MAXIMUM TAILWATER DEPTH OR TO THE TOP OF THE BANK, WHICHEVER IS LESS.

STRUCTURE	Q Full (cfs)	E (ft.)	L (ft.)	P (ft.)	D (in.)	STONE THICKNESS (in.)	STONE DIA. (in.)	STONE CLASS	VEL. (fps.)
OP-1	35.87	6.00	12.0	14.00	2.00	22	6	B	11.42
OP-2	35.87	6.00	12.0	14.00	2.00	22	6	B	11.42
OP-3	35.87	6.00	12.0	14.00	2.00	22	6	B	11.42

MAINTENANCE
RIP RAP SHOULD BE INSPECTED PERIODICALLY FOR SCOUR OR DISLODGED STONES. CONTROL OF WEED AND BRUSH GROWTH MAY BE NEEDED IN SOME LOCATIONS.

RIP RAP PAD PIPE OUTLET
NOT TO SCALE

NOTES:

1. CONSTRUCT THE ENTRANCE TO THE SLOPE DRAIN OF A STANDARD FLARED-END SECTION OF PIPE WITH A MINIMUM 6-INCH METAL TOE PLATE (CROSS-SECTION VIEW). MAKE ALL FITTINGS WATERTIGHT. A STANDARD T-SECTION FITTING MAY ALSO BE USED AT THE INLET.

2. USE AN EARTHEN DIVERSION TO DIRECT SURFACE RUNOFF INTO THE TEMPORARY SLOPE DRAIN. MAKE THE HEIGHT OF THE BERM OVER THE DRAIN CONDUIT A MINIMUM OF 1.5 FT AND AT LEAST 6 INCHES HIGHER THAN THE ADJOINING BERM ON EITHER SIDE.
THE LOWEST POINT OF THE DIVERSION BERM SHOULD BE A MINIMUM OF 1 FT ABOVE THE TOP OF THE DRAIN SO THAT DESIGN FLOW CAN FREELY ENTER THE PIPE.

3. PROTECT THE OUTLET OF THE SLOPE DRAIN FROM EROSION WITH RIPRAP DISSIPATER.

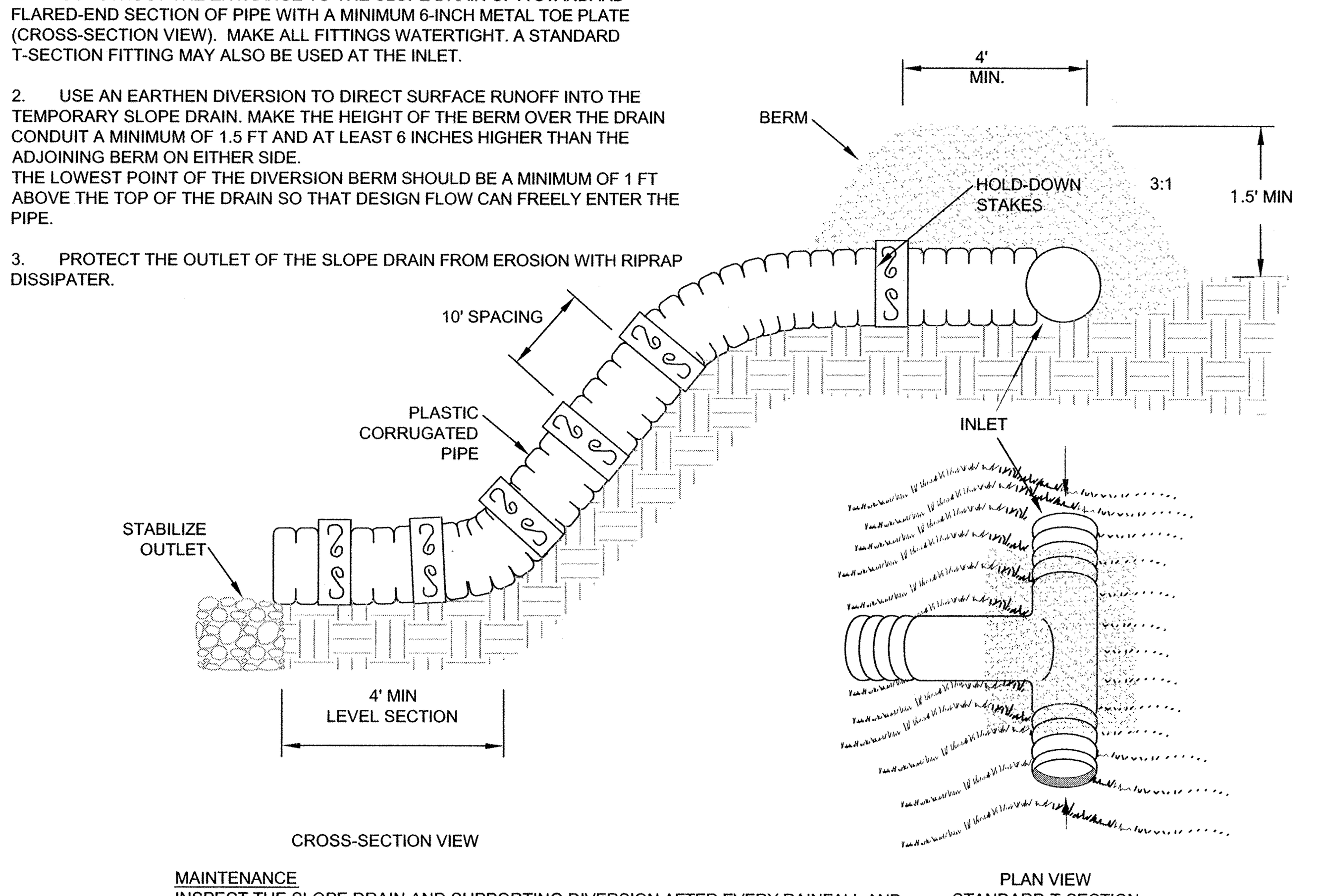

MAINTENANCE
INSPECT THE SLOPE DRAIN AND SUPPORTING DIVERSION AFTER EVERY RAINFALL AND PROPMTLY MAKE NECESSARY REPAIRS. WHEN THE PROTECTED AREA HAS BEEN PERMANENTLY STABILIZED, TEMPORARY MEASURES MAY BE REMOVED, MATERIALS DISPOSED OF PROPERLY, AND ALL DISTURBED AREAS STABILIZED APPROPRIATELY.

TEMPORARY SLOPE DRAIN
NOT TO SCALE

SEEDING SCHEDULE
(REVISED: 1-1-86)

Shoulders, Side Ditches, Slopes (Max 3:1)

DATE	TYPE	PLANTING RATE
Aug 15 – Nov 1	Tall Fescue	300 lbs/acre
Nov 1 – Mar 1	Tall Fescue	300 lbs/acre
	& Abruzzi Rye	25 lbs/acre
Mar 1 – Apr 15	Tall Fescue	300 lbs/acre
Apr 15 – Jun 30	Hulled Common Bermudagrass	25 lbs/acre
Jul 1 – Aug 15	Tall Fescue and	120 lbs/acre
	***Browntop Millet	35 lbs/acre
	***or Sorghum–Sudan Hybrids	30 lbs/acre

Slopes (3:1 to 2:1)

DATE	TYPE	PLANTING RATE
Mar 1 – Jun 1	Sericea Lespedeza (scarified)	50 lbs/acre
	&	
(Mar 1 – Apr 15)	Add Tall Fescue	120 lbs/acre
(Mar 1 – Jun 30)	Or Add Weeping Lovegrass	10 lbs/acre
(Mar 1 – Jun 30)	Or Add Hulled Common Bermudagrass	25 lbs/acre
Jun 1 – Sep 1	***Tall Fescue and	120 lbs/acre
	***Browntop Millet	35 lbs/acre
	***or Sorghum–Sudan Hybrids	30 lbs/acre
Sep 1 – Mar 1	Sericea Lespedeza (unhulled–unscarified) and Tall Fescue	70 lbs/acre 120 lbs/acre
(Nov 1 – Mar 1)	Add Abruzzi Rye	25 lbs/acre

Consult Conservation Engineer or Soil Conservation Service for additional information concerning other alternatives for vegetation of denuded areas. The above vegetation rates are those which do well under local conditions; other seeding rate combinations are possible.

***Temporary – Reseed according to optimum season for desired permanent vegetation. Do not allow temporary cover to grow over 12" in height before mowing, otherwise fescue may be shaded out.

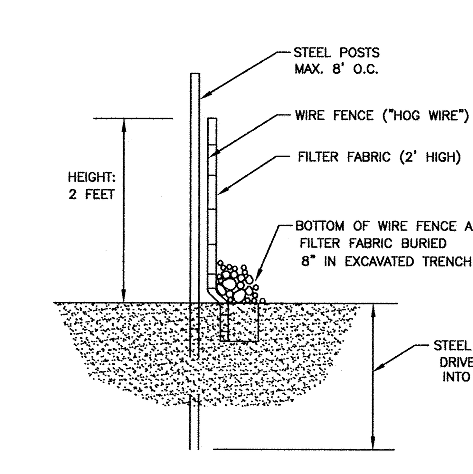

NOTES:

FABRIC SHALL EXTEND INTO TRENCH 8-INCHES DOWN AND 4-INCHES FORWARD ALONG TRENCH.
INSPECT SILT FENCE AT LEAST ONCE A WEEK AND AFTER EVERY RAINFALL. MAKE ANY REQUIRED REPAIRS IMMEDIATELY.
SHOULD FABRIC OF SILT FENCE COLLAPSE, TEAR, DECOMPOSE OR BECOME INEFFECTIVE,REPLACE IT PROMPTLY.
REMOVE SEDIMENT DEPOSITS AS NECESSARY TO PROVIDE ADEQUATE STORAGE VOLUME FOR NEXT RAIN AND TO REDUCE PRESSURE ON THE FENCE. TAKE CARE TO AVOID UNDERMINING THE FENCE DURING CLEANOUT.
IF THE TOP OF SEDIMENT ELEVATION REACHES ONE-THIRD (⅓) OF THE HEIGHT OF THE FENCE, SEDIMENT MUST BE REMOVED.
REMOVE ALL FENCING MATERIALS AND UNSTABLE SEDIMENT DEPOSITS AND BRING THE AREA TO GRADE AND STABILIZE IT AFTER THE CONTRIBUTING DRAINAGE AREA HAS BEEN PROPERLY STABILIZED.

SEDIMENT FENCE (SILT FENCE)
NOT TO SCALE

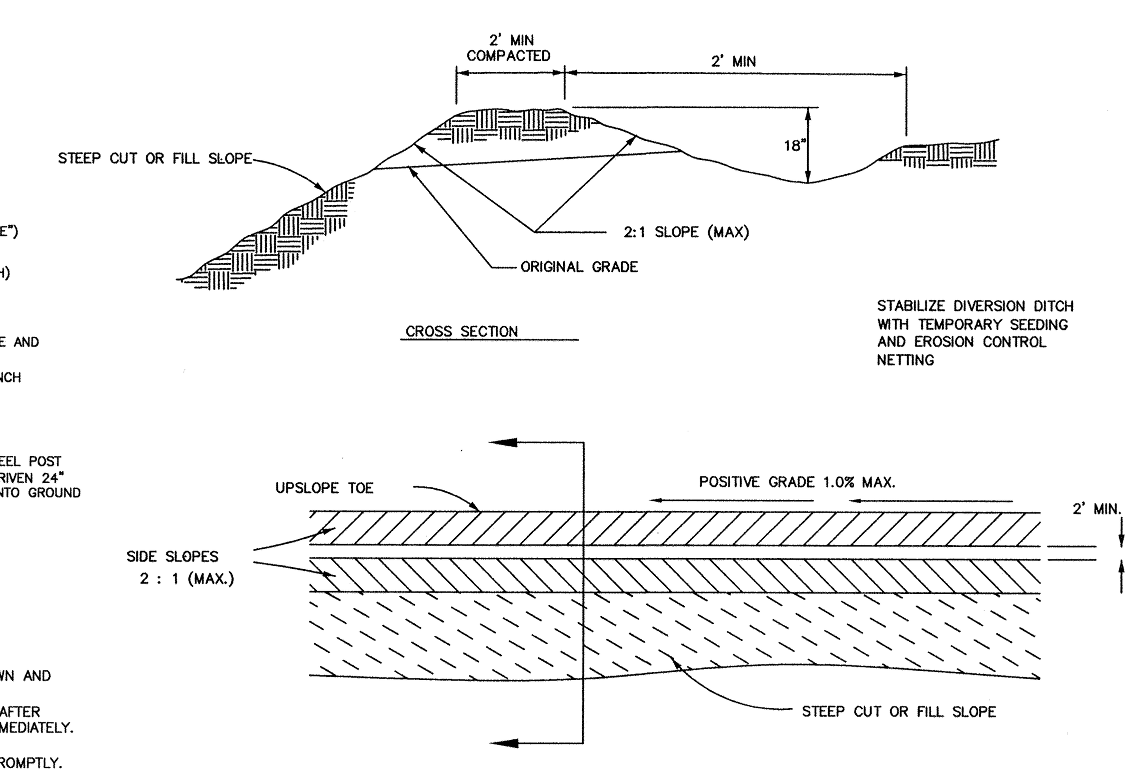

DIVERSION DITCH

SEEDBED PREPARATION

1.) CHISEL COMPACTED AREAS AND SPREAD TOPSOIL 3 INCHES DEEP OVER ADVERSE SOIL CONDITIONS, IF AVAILABLE.
2.) RIP THE ENTIRE AREA TO 6 INCHES DEPTH.
3.) REMOVE ALL LOOSE ROCK, ROOTS, AND OTHER OBSTRUCTIONS LEAVING SURFACE REASONABLY SMOOTH AND UNIFORM.
4.) APPLY AGRICULTURAL LIME, FERTILIZER, AND SUPERPHOSPHATE UNIFORMLY AND MIX WITH SOIL (SEE BELOW*).
5.) CONTINUE TILLAGE UNTIL A WELL-PULVERIZED, FIRM REASONABLY UNIFORM SEEDBED IS PREPARED 4 TO 6 INCHES DEEP.
6.) SEED ON A FRESHLY PREPARED SEEDBED AND COVER SEED LIGHTLY WITH SEEDING EQUIPMENT OR CULTIPACK AFTER SEEDING.
7.) MULCH IMMEDIATELY AFTER SEEDING AND ANCHOR MULCH.
8.) INSPECT ALL SEEDED AREAS AND MAKE NECESSARY REPAIRS OR RESEEDINGS WITHIN THE PLANTING SEASON, IF POSSIBLE. IF STAND SHOULD BE OVER 60% DAMAGED, REESTABLISH FOLLOWING ORIGINAL LIME, FERTILIZER AND SEEDING RATES.
9.) CONSULT CONSERVATION INSPECTOR ON MAINTENANCE TREATMENT AND FERTILIZATION AFTER PERMANENT COVER IS ESTABLISHED.

* APPLY: AGRICULTURAL LIMESTONE – 2 TONS/ ACRES (3 TONS/ ACRE IN CLAY SOILS OR PER SOILS TEST)
FERTILIZER – 1,000 lbs. / ACRE –10-10-10
SUPERPHOSPHATE– 500 lbs> / ACRE –20% ANALYSIS
MULCH –2 TONS / ACRE – SMALL GRAIN STRAW
ANCHOR – ASPHALT EMULSION @ 400 GALS./ ACRE

Plotted By: Gearhart, Craig Sheet Set: Chatham Medical Office Building Layout: C-900 EROSION CONTROL DETAILS July 18, 2014 10:43:19am K:\RDT_LDEV\012325022_chatham mob\planning phase\15_cad files\plansheets\C-900 EROSION CONTROL DETAILS.dwg
This document, together with the concepts and designs presented herein, as an instrument of service, is intended only for the specific purpose and client for which it was prepared. Reuse of and improper reliance on this document without written authorization and adaptation by Kimley-Horn and Associates, Inc. shall be without liability to Kimley-Horn and Associates, Inc.

No.	REVISIONS	DATE	BY
3	NCDENR EXPRESS REVIEW COMMENTS	7/18/14	KCG
2	REVISED PER TOWN OF PITTSBORO 2ND COMMENTS	7/16/14	BTO
1	REVISED PER TOWN OF PITTSBORO 1ST COMMENTS	5/21/14	WJB

Kimley»Horn

© 2014 KIMLEY-HORN AND ASSOCIATES, INC.
333 FAYETTEVILLE STREET, SUITE 600, RALEIGH, NC 27601
PHONE: 919-835-1494 FAX: 919-653-5847
WWW.KIMLEY-HORN.COM

KHA PROJECT 012325022
DATE 01/28/2014
SCALE AS SHOWN
DESIGNED BY BTO
DRAWN BY KCG
CHECKED BY WJB

CHATHAM MEDICAL OFFICE BUILDING
PREPARED FOR
CHATHAM PARK INVESTORES LLC
PITTSBORO NC

NORTH CAROLINA PROFESSIONAL SEAL 039196 ENGINEER W. JORDAN BREWER 7/18/14

EROSION CONTROL DETAILS

SHEET NUMBER
C-900

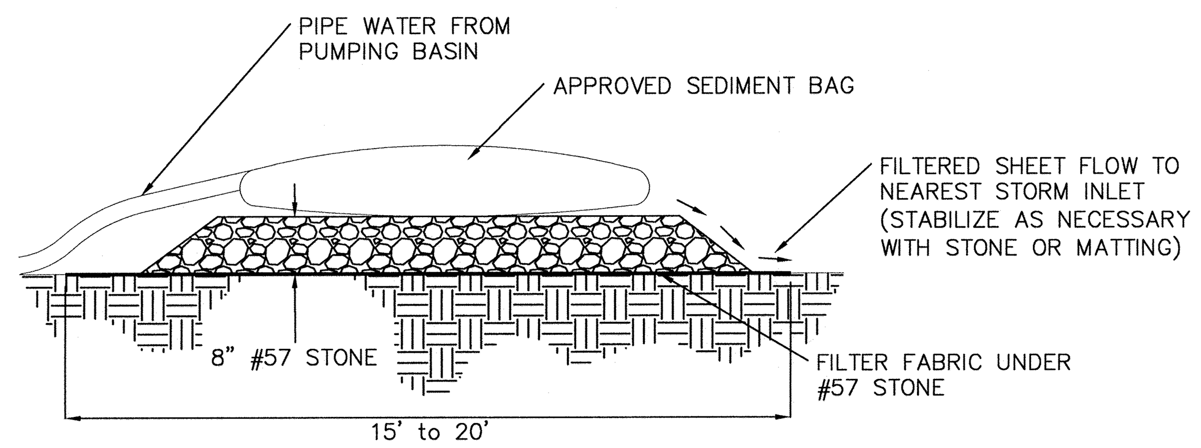

PUMPING SILT BAG DETAIL

NOT TO SCALE

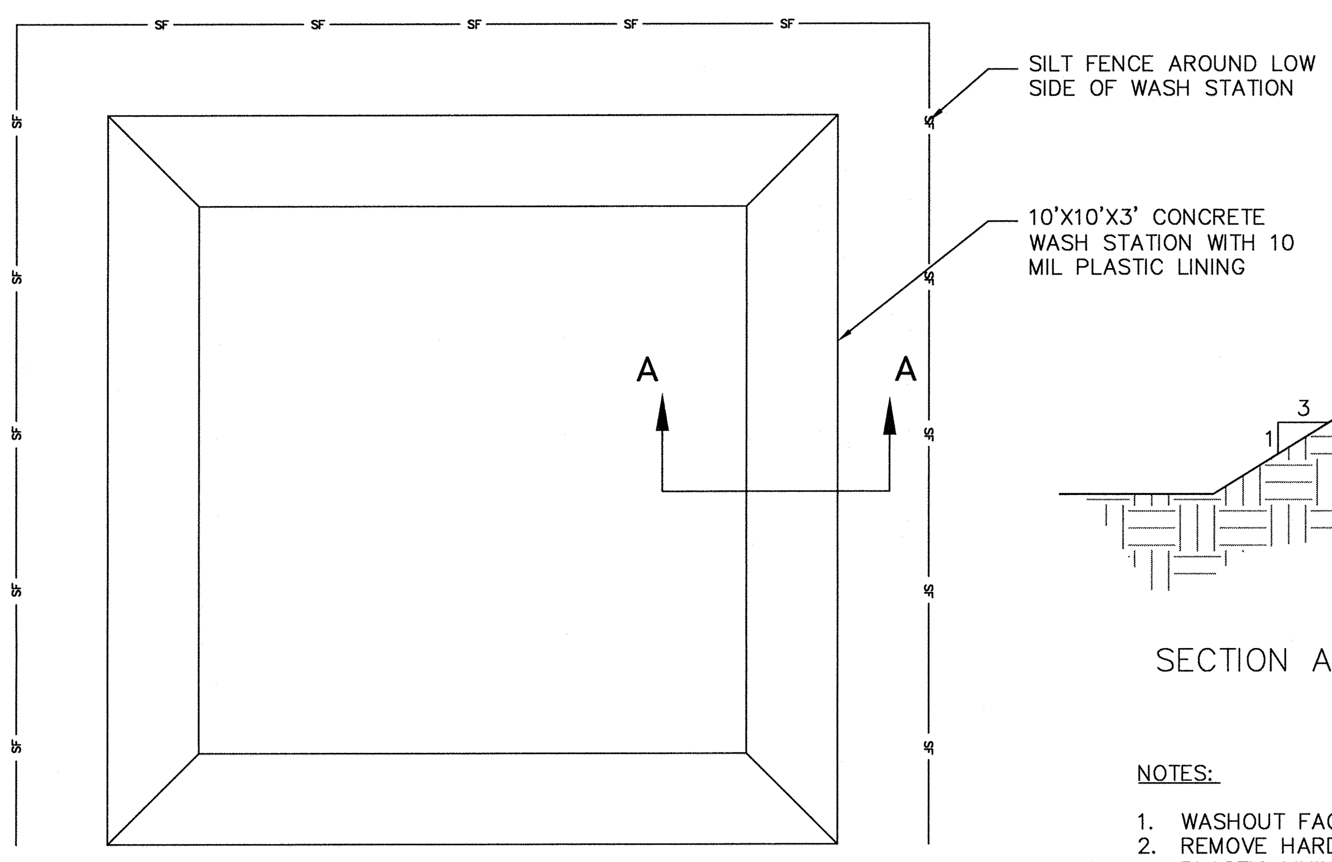

CONCRETE WASH STATION

NOT TO SCALE

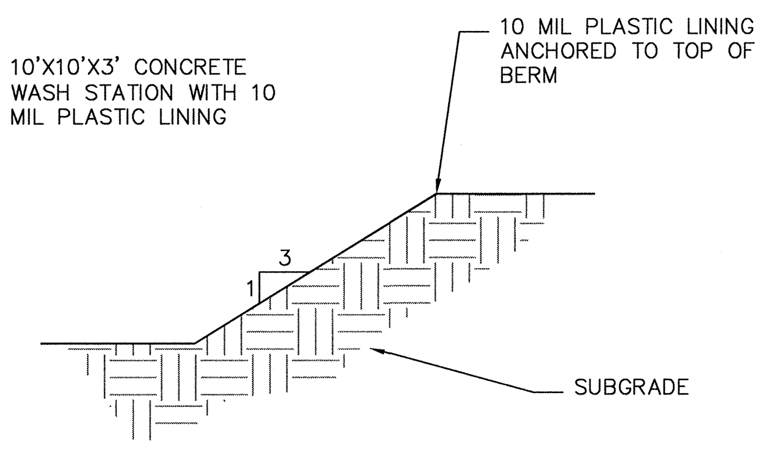

SECTION A–A

NOTES:

1. WASHOUT FACILITY SHOULD BE CLEANED ONCE 75% FULL.
2. REMOVE HARDENED CONCRETE AND DEBRIS AND RESTORE PLASTIC LINING AS NECESSARY.
3. MINIMUM OF 50' FROM ALL INLETS & SURFACE WATERS.

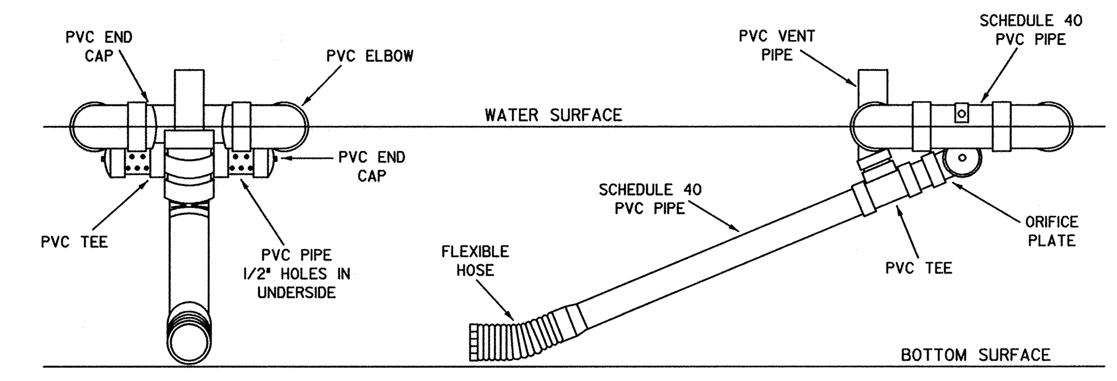

SKIMMER SEDIMENT BASINS ARE NEEDED WHERE DRAINAGE AREAS ARE TOO LARGE FOR TEMPORARY TRAPS. DO NOT LOCATE THE SKIMMER SEDIMENT BASIN IN INTERMITTENT OR PERENNIAL STREAMS.

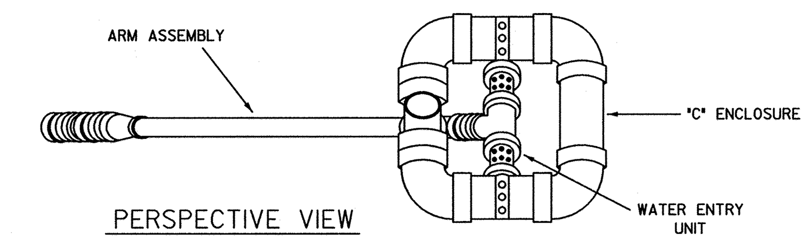

SKIMMER DETAIL

NOT TO SCALE

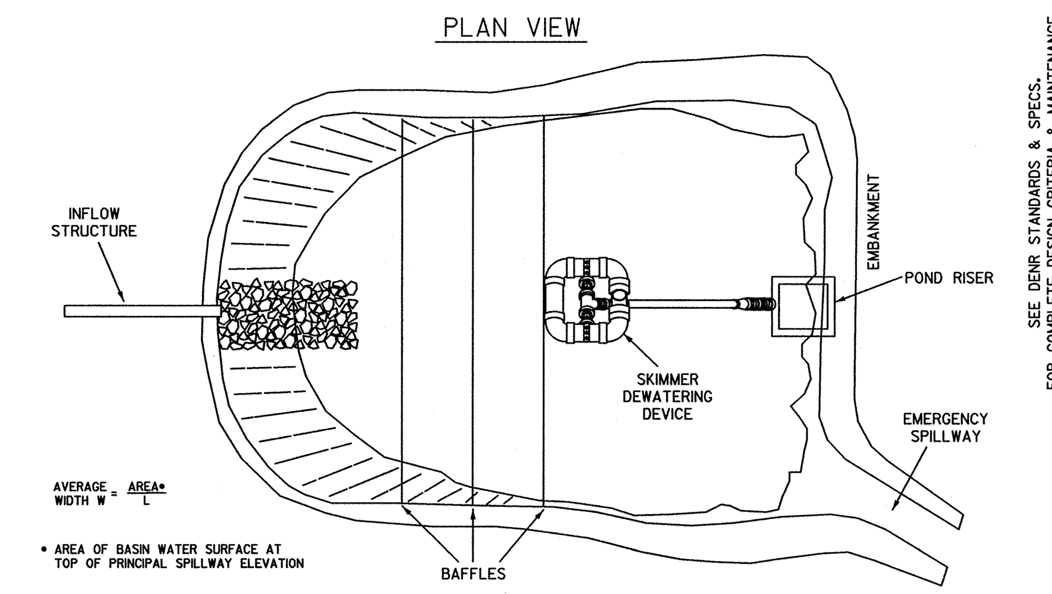

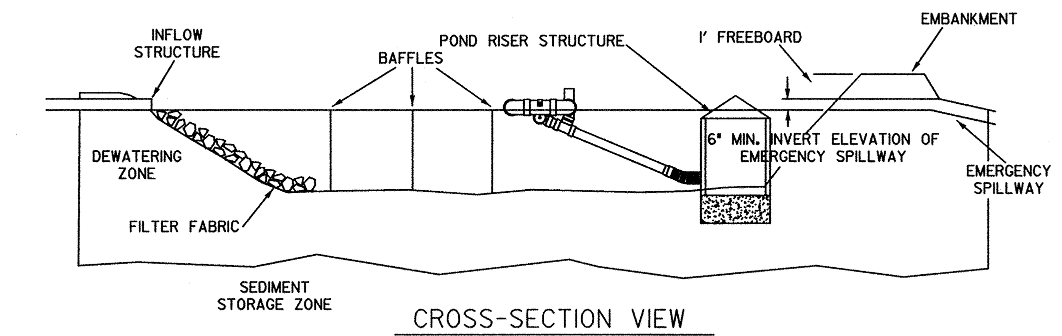

CROSS-SECTION VIEW

DESIGN CRITERIA

SUMMARY:	TEMPORARY SEDIMENT BASIN
PRIMARY SPILLWAY:	TRAPEZODIAL SPILLWAY WITH IMPERMEABLE MEMBRANE
MAXIMUM DRAINAGE AREA:	100 ACRES
MINIMUM VOLUME:	1800 CUBIC FEET PER ACRE OF DISTURBED AREA
MINIMUM SURFACE AREA	435 SQUARE FEET PER CFS OF Q_{25} PEAK FLOW
MINIMUM L/W RATIO:	2:1
MAXIMUM L/W RATIO:	6:1
MINIMUM DEPTH:	2 FEET
DEWATERING MECHANISM:	SKIMMER
MINIMUM DEWATERING TIME:	24 HOURS
BAFFLES REQUIRED:	3 BAFFLES
DESIGN LIFE:	LESS THAN 3 YEARS

MAINTENANCE

1. INSPECT SKIMMER BASIN AT LEAST WEEKLY AND AFTER EACH SIGNIFICANT(½" OR GREATER) RAINFALL EVENT. REMOVE SEDIMENT AND RESTORE THE BASIN TO ITS ORIGINAL DIMENSIONS WHEN SEDIMENT ACCUMULATES TO ONE-HALF THE HEIGHT OF THE FIRST BAFFLE. PULL THE SKIMMER TO ONE SIDE SO THAT THE SEDIMENT UNDERNEATH IT CAN BE EXCAVATED. EXCAVATE THE SEDIMENT FROM THE ENTIRE BASIN, NOT JUST AROUND THE SKIMMER OR THE FIRST CELL. MAKE SURE VEGETATION GROWING IN THE BOTTOM OF THE BASIN DOES NOT HOLD DOWN THE SKIMMER.
2. REPAIR BAFFLES IF DAMAGED. RE-ANCHOR THE BAFFLES IF WATER IS FLOWING UNDERNEATH OR AROUND THEM.
3. INSPECT AND CLEAN SKIMMER IF CLOGGED.
4. INSPECT SPILLWAY, EMBANKMENT, OUTLET AND MAKE ALL NECESSARY REPAIRS IMMEDIATELY. REMOVE ALL TRASH AND OTHER DEBRIS FROM THE POOL AREAS.

RISER BASIN DETAIL

NOT TO SCALE

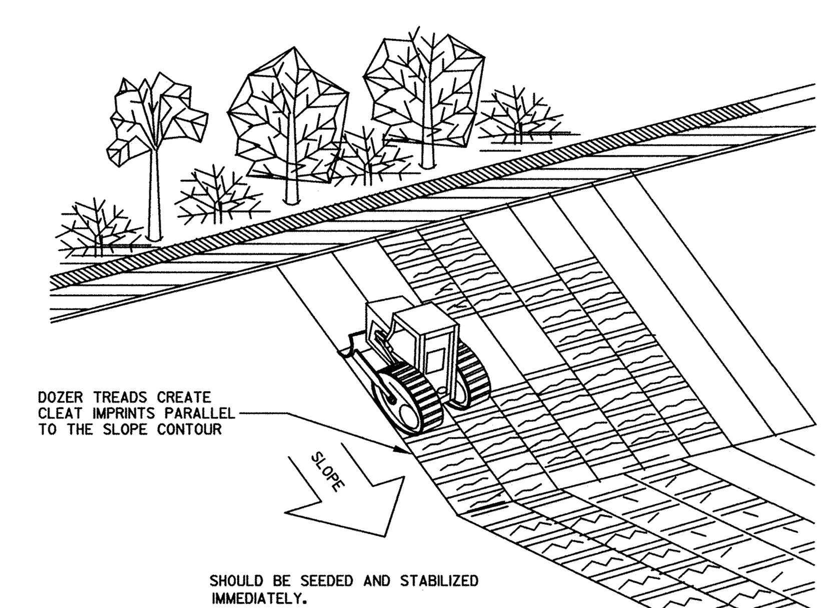

TRACKING SLOPE DETAIL

NOT TO SCALE

NOTES:

1. STRUCTURAL STONE SHALL BE (CLASS "B") STONE FOR EROSION CONTROL PURPOSES. SEDIMENT CONTROL STONE SHALL BE NO. 5 OR NO. 57 STONE.
2. CONTRACTOR TO PLACE AS REQUIRED TO PREVENT SILT FENCE FAILURE. LOCATIONS SHOWN ON PLAN ARE FOR ILLUSTRATIVE PURPOSES ONLY. ADDITIONAL OUTLETS MAY BE REQUIRED AS GRADES CHANGE THROUGHOUT THE PROJECT CONSTRUCTION.

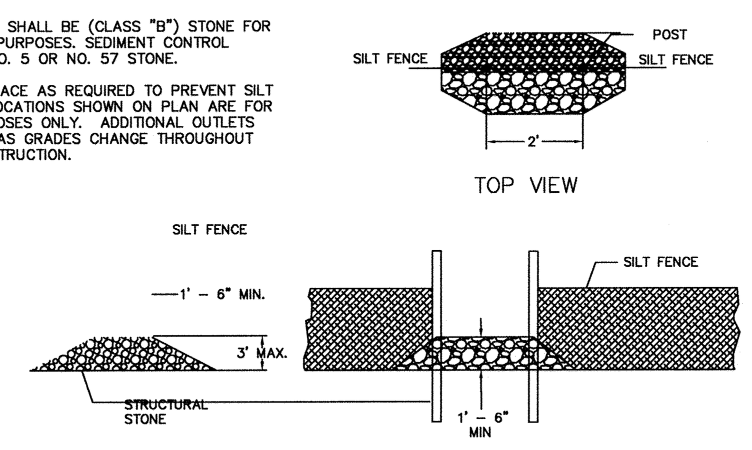

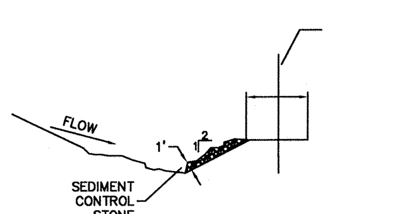

MAINTENANCE

1. INSPECT SILT FENCE OUTLET AT LEAST WEEKLY AND AFTER EACH SIGNIFICANT (1/2" OR GREATER) RAINFALL EVENT AND REPAIR IMMEDIATELY.
2. REMOVE SEDIMENT FROM THE SEDIMENT AROUND OUTLET AND REPLENISH STONE IF NECESSARY.

STONE OUTLET DETAIL

DESIGN CRITERIA

THE DRAINAGE AREA IS LIMITED TO ONE HALF ACRE.
KEEP A MAXIMUM HEIGHT OF 2 FEET AT THE CENTER OF THE DAM.
KEEP THE CENTER OF THE CHECK DAM AT LEAST 9 INCHES LOWER THAN THE OUTER EDGES AT NATURAL GROUND ELEVATION.
KEEP THE SIDE SLOPES OF THE DAM AT 2:1 OR FLATTER
ENSURE THAT THE MAXIMUM SPACING BETWEEN DAMS PLACES THE TOE OF THE UPSTREAM DAM AT THE SAME ELEVATION AS THE TOP OF THE DOWNSTREAM DAM.
STABILIZE OUTFLOW AREAS ALONG THE CHANNEL TO RESIST EROSION.
USE NCDOT CLASS B STONE AND LINE THE UPSTREAM SIDE OF THE DAM WITH NCDOT #5 OR #57 STONE.
KEY THE STONE INTO THE DITCH BANKS AND EXTEND IT BEYOND THE ABUTMENTS A MINIMUM OF 1.5 FEET TO AVOID WASHOUT FROM OVERFLOW AROUND THE DAM.

MAINTENANCE

1. INSPECT CHECK DAMS AND CHANNELS AT LEAST WEEKLY AND AFTER EACH SIGNIFICANT (½" OR GREATER) RAINFALL EVENT AND REPAIR IMMEDIATELY. CLEAN OUT SEDIMENT, STRAW, LIMBS, OR OTHER DEBRIS THAT COULD CLOG THE CHANNEL WHEN NEEDED.
2. ANTICIPATE SUBMERGENCE AND DEPOSITION ABOVE CHECK DAM AND EROSION FROM HIGH FLOWS AROUND EDGES OF DAM. CORRECT ALL DAMAGE IMMEDIATELY. IF SIGNIFICANT EROSION OCCURS BETWEEN DAMS, ADDITIONAL MEASURES CAN BE TAKEN SUCH AS, INSTALLING A PROTECTIVE RIP RAP LINER IN THAT PORTION OF CHANNEL.
3. REMOVE SEDIMENT ACCUMULATED BEHIND THE DAMS AS NEEDED TO PREVENT DAMAGE TO CHANNEL VEGETATION, ALLOW THE CHANNEL TO DRAIN THROUGH THE STONE CHECK DAM, AND PREVENT LARGE FLOWS FROM CARRYING SEDIMENT OVER THE DAM. ADD STONES TO DAMS AS NEEDED TO MAINTAIN DESIGN HEIGHT AND CROSS SECTION.

1. PLACE STONE TO THE LINE AND DIMENSION SHOWN IN THE PLAN ON A FILTER FABRIC FOUNDATION.
2. KEEP THE CENTER STONE SECTION AT LEAST 9 INCHES BELOW NATURAL GROUND LEVEL WHERE THE DAM ABUTS THE CHANNEL BANKS.
3. EXTEND STONE AT LEAST 1.5 FEET BEYOND THE DITCH BANK TO KEEP WATER FROM CUTTING AROUND THE ENDS OF THE CHECK DAM.
4. SET SPACING BETWEEN DAMS TO ASSURE THAT THE ELEVATION AT THE TOP OF THE LOWER DAM IS THE SAME AS THE TOE ELEVATION OF THE UPPER DAM.
5. PROTECT THE CHANNEL AFTER THE LOWEST CHECK DAM FROM HEAVY FLOW THAT COULD CAUSE EROSION.
6. MAKE SURE THAT THE CHANNEL REACH ABOVE THE MOST UPSTREAM IS STABLE.
7. ENSURE THAT OTHER AREAS OF THE CHANNEL, SUCH AS CULVERT ENTRANCES BELOW THE CHECK DAMS, ARE NOT SUBJECT TO DAMAGE OR BLOCKAGE FROM DISPLACED STONES.

NOTES

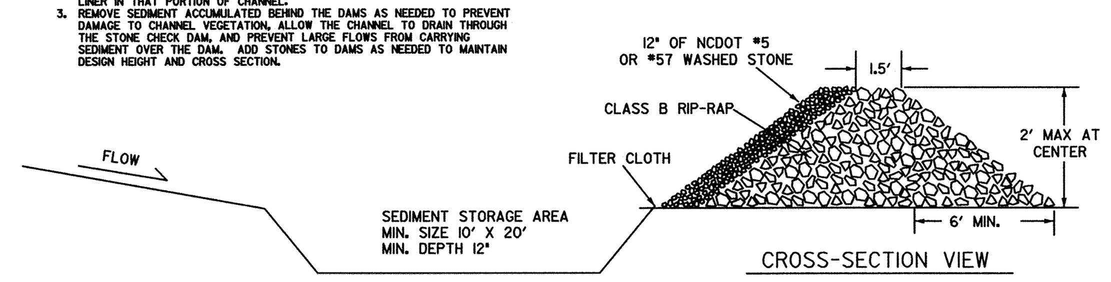

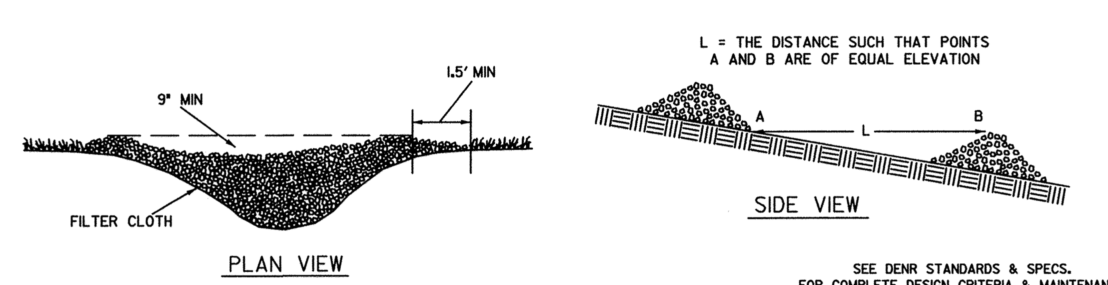

SEE DENR STANDARDS & SPECS. FOR COMPLETE DESIGN CRITERIA & MAINTENANCE

CHECK DAM WITH WEIR (SEDIMENT STORAGE) DETAIL

NOT TO SCALE

Notification of Combined Self-Monitoring and Self-Inspection Form:

The Sedimentation Pollution Control Act was amended in 2006 to require that persons responsible for land-disturbing activities inspect a project after each phase of the project to make sure that the approved erosion and sedimentation control plan is being followed. Rules detailing the documentation of these inspections took effect October 1, 2010.

To simplify documentation of Self-Inspection reports and NPDES Self-Monitoring Reports, DWQ and DEMLR developed a combined form. The self-inspection program is separate from the weekly self-monitoring program of the NPDES Stormwater Permit for Construction Activities. The focus of the self-inspection report is the installation and maintenance of erosion and sedimentation control measures according to the approved plan. The inspections should be conducted after each phase of the project, and continued until permanent ground cover is established. The form can be accessed at:
http://portal.ncdenr.org/web/lr/erosion

If you have questions or cannot access the form, please contact the Raleigh Regional Office at (919) 791-4200.

4

STATE OF NORTH CAROLINA
DEPARTMENT OF ENVIRONMENT AND NATURAL RESOURCES
DIVISION OF WATER QUALITY

GENERAL PERMIT – NCG 010000

TO DISCHARGE STORMWATER UNDER THE
NATIONAL POLLUTANT DISCHARGE ELIMINATION SYSTEM
for

CONSTRUCTION ACTIVITIES

3) Self Inspection and Reporting Requirements

Minimum self inspection and reporting requirements are as follows unless otherwise approved in writing by the Division of Water Quality.

a) A rain gauge shall be maintained in good working order on the site unless another rain-monitoring device has been approved by the Division of Water Quality.
b) A written record of the daily rainfall amounts shall be retained and all records shall be made available to Division of Water Quality or authorized agent upon request. If no daily rain gauge observations are made during weekend or holiday periods, and no individual-day rainfall information is available, the cumulative rain measurement for those un-attended days will determine if a site inspection is needed. (Note: if no rainfall occurred, the permittee must record "zero").
c) Erosion and sedimentation control measures shall be inspected to ensure that they are operating correctly. Inspection records must be maintained for each inspection event and for each measure. At a minimum, inspection of measures must occur at the frequency indicated below:
   i) All erosion and sedimentation control measures must be inspected by or under the direction of the permittee at least once every seven calendar days, and
   ii) All erosion and sediment control measures must be inspected by or under the direction of the permittee within 24 hours after any storm event of greater than 0.50 inches of rain per 24 hour period.

ALL CONSTRUCTION TO BE IN ACCORDANCE WITH ALL TOWN OF PITTSBORO AND/OR NCDOT STANDARDS AND SPECIFICATIONS.

SURVEY NOTE:

ALL EXISTING SITE AND TOPOGRAPHIC INFORMATION SHOWN BASED ON AN ALTA/ACSM LAND TITLE SURVEY DATED FEBRUARY 15, 2013. PROVIDED BY WHITHERS & RAVENEL. 115 MACKENAN DR, CARY NC 27511. PHONE 919-469-3340

No.	REVISIONS	DATE	BY
4	NCDENR EXPRESS REVIEW COMMENTS	7/25/14	KCG
3	NCDENR EXPRESS REVIEW COMMENTS	7/18/14	KCG
2	REVISED PER TOWN OF PITTSBORO 2ND COMMENTS	7/16/14	BTO
1	REVISED PER TOWN OF PITTSBORO 1ST COMMENTS	5/21/14	WJB

Kimley»Horn

© 2014 KIMLEY-HORN AND ASSOCIATES, INC.

333 FAYETTEVILLE STREET, SUITE 600, RALEIGH, NC 27601
PHONE: 919-835-1494 FAX: 919-653-5847
WWW.KIMLEY-HORN.COM

KHA PROJECT	012325022
DATE	01/28/2014
SCALE	AS SHOWN
DESIGNED BY	BTO
DRAWN BY	KCG
CHECKED BY	WJB

CHATHAM MEDICAL OFFICE BUILDING

PREPARED FOR

CHATHAM PARK INVESTORS LLC

PITTSBORO NC

NORTH CAROLINA PROFESSIONAL ENGINEER SEAL 039196 W. JORDAN BREWER 7/25/14

EROSION CONTROL DETAILS

SHEET NUMBER

C-901

Plotted By: Gearhart, Craig Sheet Set: Chatham Medical Office Building Layout: C-901 EROSION CONTROL DETAILS July 25, 2014 03:23:59pm K:\RDT_LDEV\012325022_chatham mob\planning phase\15_cad files\plansheets\C-901 EROSION CONTROL DETAILS.dwg
This document, together with the concepts and designs presented herein, as an instrument of service, is intended only for the specific purpose and client for which it was prepared. Reuse of and improper reliance on this document without written authorization and adaptation by Kimley-Horn and Associates, Inc. shall be without liability to Kimley-Horn and Associates, Inc.

Plotted By: Moeller, Melissa Sheet Set: Chatham Medical Office Building Layout: L-100 LANDSCAPE PLAN July 30, 2014 09:44:32am K:\RDT_LDEV\012325022_Chatham MOB\Planning Phase\15_CAD Files\PlanSheets\L-100 LANDSCAPE PLAN.dwg
This document, together with the concepts and designs presented herein, as an instrument of service, is intended only for the specific purpose and client for which it was prepared. Reuse of and improper reliance on this document without written authorization and adaptation by Kimley-Horn and Associates, Inc. shall be without liability to Kimley-Horn and Associates, Inc.

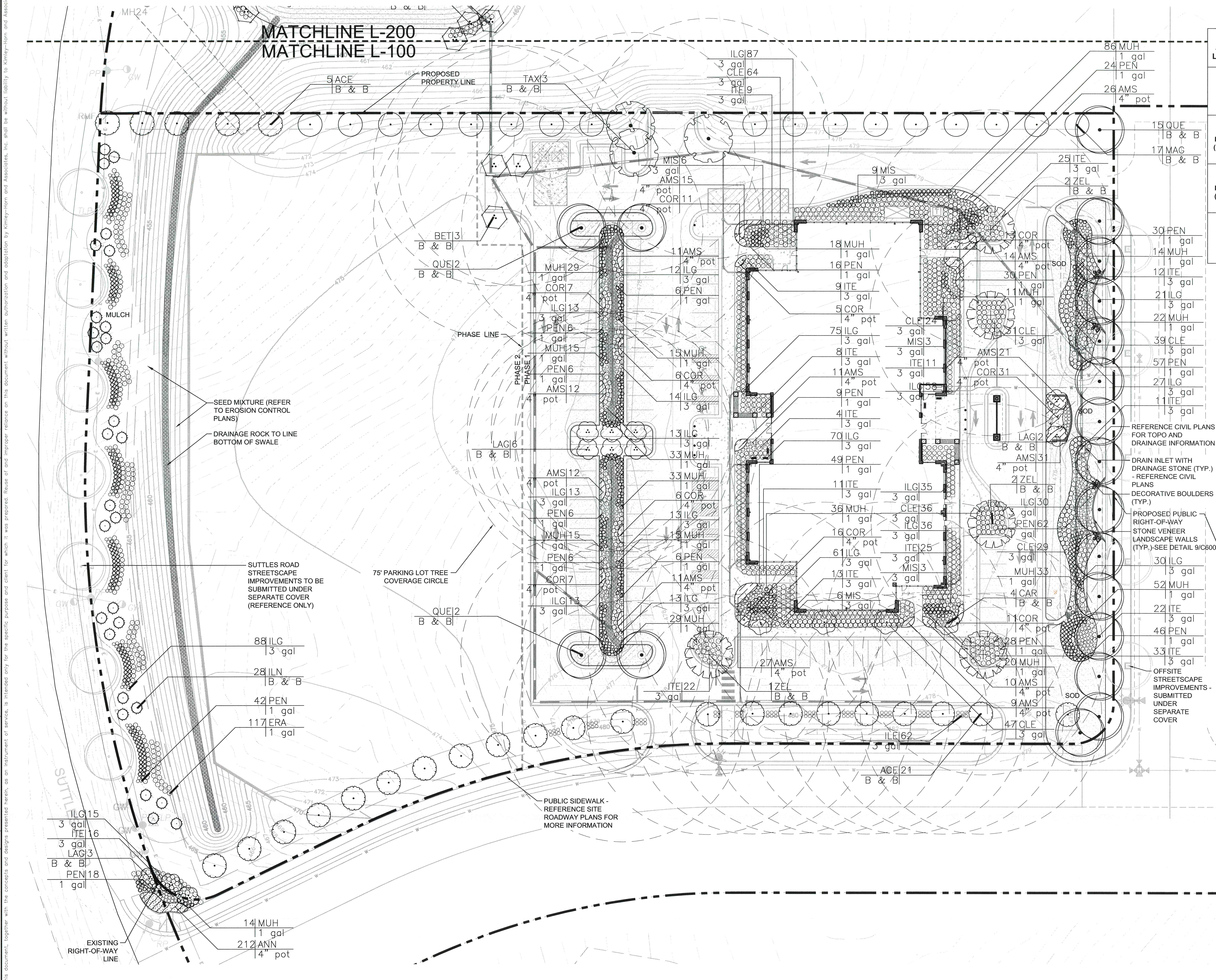

TREE REQUIREMENT:

AREA TO BE LANDSCAPED	CODE REQUIREMENT	TOTAL SPACES/ LINEAR FEET	TOTAL QUANTITY REQUIRED	TOTAL QUANTITY PROVIDED	CODE SECTION
PARKING LOT	0.10 LARGE TREES PER PARKING SPACE 0.125 SMALL TREES PER PARKING SPACE	103	LARGE TREES: 103/0.10 = 10.3 SMALL TREES: 103/0.125 = 12.90 TREES	11 LARGE TREES 13 SMALL TREES	ARTICLE XVIII 18.3
STREET LANDSCAPING (FRONT - EAST)	FOR EVERY 100 LINEAR FEET OF LANDSCAPING THERE SHALL BE AT A MINIMUM FOUR LARGE TREES	349.8 LF	(EXCLUDING DRIVES) 349.8 LF / 100 LF = 3.49 3.49 x 4 TREES = 13.99	14 LARGE TREES	ARTICLE XVIII 18.2
STREET LANDSCAPING (SIDE - SOUTH)	FOR EVERY 100 LINEAR FEET OF LANDSCAPING THERE SHALL BE AT A MINIMUM FOUR SMALL TREES AND 12 SHRUBS	504.38 LF	504.38 LF / 100 LF = 5.04 5.04 x 4 TREES = 20.18 5.04 x 12 SHRUBS = 60.48	21 SMALL TREES 62 SHRUBS	ARTICLE XVIII 18.2
PROPERTY SCREEN (NORTH)	TYPE C - BROKEN SCREEN. A SCREEN COMPOSED OF INTERMEDIATE VISUAL OBSTRUCTIONS FROM THE GROUND TO AT LEAST 20' HEIGHT. TREES WITH NO MORE THEN 10' SPACES BETWEEN THEM AT MATURE SIZE.	602.57 LF	TREES WITH NO MORE THEN 10' SPACES BETWEEN THEM AT MATURE SIZE.	23 TREES	ARTICLE VII 7.5 APPENDIX 1 A1.1 C

GENERAL LANDSCAPE NOTES:

ALL PLANTS MUST BE HEALTHY, VIGOROUS MATERIAL, FREE OF PESTS AND DISEASE.

ALL PLANTS MUST BE CONTAINER GROWN OR BALLED AND BURLAPPED AS INDICATED IN THE PLANT LIST.

ALL TREES MUST HAVE A STRAIGHT TRUNK AND FULL HEADED AND MEET ALL REQUIREMENTS SPECIFIED.

ALL PLANTS ARE SUBJECT TO THE APPROVAL OF THE LANDSCAPE ARCHITECT BEFORE, DURING, AND AFTER INSTALLATION.

ALL TREES MUST BE GUYED OR STAKED AS SHOWN IN THE DETAILS.

ALL SHADE TREES ADJACENT TO PEDESTRIAN WALKWAYS SHALL BE BRANCHED 6'–7' PER ANSI Z60.1 STANDARDS FOR HEIGHT OF BRANCHING – STREET TREES. ALL SHADE TREES LOCATED WITHIN VEHICLE SIGHT TRIANGLES SHALL BE BRANCHED MIN. 8' (MEASURED FROM ADJACENT PROJECTED CURB LINE ELEVATION) PER ANSI Z60.1 STANDARDS FOR HEIGHT OF BRANCHING – STREET TREES.

ALL PLANTING AREAS MUST BE COMPLETELY MULCHED AS SPECIFIED.

PRIOR TO CONSTRUCTION, THE CONTRACTOR SHALL BE RESPONSIBLE FOR LOCATING ALL UNDERGROUND UTILITIES AND SHALL AVOID DAMAGE TO ALL UTILITIES AND SHALL AVOID DAMAGE TO ALL UTILITIES DURING THE COURSE OF THE WORK. THE CONTRACTOR IS RESPONSIBLE FOR REPAIRING ANY AND ALL DAMAGE TO UTILITIES, STRUCTURES, SITE APPURTENANCES, ETC. WHICH OCCURS AS A RESULT OF THE LANDSCAPE CONSTRUCTION.

THE CONTRACTOR IS RESPONSIBLE FOR VERIFYING ALL QUANTITIES SHOWN ON THESE PLANS BEFORE PRICING THE WORK. ANY DISCREPANCIES BETWEEN QUANTITIES ON PLAN AND PLANT LIST SHALL BE BROUGHT TO THE ATTENTION OF TOWN OF PITTSBORO INSPECTOR AND ANY FIELD ADJUSTMENTS OR QUANTITY ADJUSTMENTS MUST BE AUTHORIZED PRIOR TO PLANTING.

THE CONTRACTOR IS RESPONSIBLE FOR FULLY MAINTAINING ALL PLANTING (INCLUDING BUT NOT LIMITED TO: WATERING, SPRAYING, MULCHING, FERTILIZING, ETC.) OF THE PLANTING AREAS AND LAWN UNTIL SUBSTANTIAL COMPLETION.

THE CONTRACTOR SHALL COMPLETELY GUARANTEE ALL PLANT MATERIAL FOR A PERIOD OF ONE (1) YEAR BEGINNING ON THE DATE OF SUBSTANTIAL COMPLETION. THE CONTRACTOR SHALL PROMPTLY MAKE ALL REPLACEMENTS BEFORE OR AT THE END OF THE GUARANTEE PERIOD.

THE LANDSCAPE ARCHITECT SHALL APPROVE THE STAKING LOCATION OF ALL PLANT MATERIAL PRIOR TO INSTALLATION.

AFTER BEING DUG AT THE NURSERY SOURCE, ALL TREES IN LEAF SHALL BE ACCLIMATED FOR TWO (2) WEEKS UNDER A MIST SYSTEM PRIOR TO INSTALLATION.

ANY PLANT MATERIAL WHICH DIES, TURNS BROWN, OR DEFOLIATES (PRIOR TO SUBSTANTIAL COMPLETION OF THE WORK) SHALL BE PROMPTLY REMOVED FROM THE SITE AND REPLACED WITH MATERIAL OF THE SAME SPECIES, QUANTITY, AND SIZE AND MEETING ALL PLANT LIST SPECIFICATIONS.

STANDARDS SET FORTH IN "AMERICAN STANDARD FOR NURSERY STOCK" REPRESENT GUIDELINE SPECIFICATIONS ONLY AND SHALL CONSTITUTE MINIMUM QUALITY REQUIREMENTS FOR PLANT MATERIAL.

ALL SHRUB, GROUND COVER AND SEASONAL COLOR ANNUAL PLANTING BEDS ARE TO BE COMPLETELY COVERED WITH TRIPLE SHREDDED HARDWOOD MULCH TO A MINIMUM DEPTH OF THREE (3) INCHES.

LOCATIONS OF EXISTING BURIED UTILITY LINES SHOWN ON THE PLANS ARE BASED UPON BEST AVAILABLE INFORMATION AND ARE TO BE CONSIDERED APPROXIMATE. IT SHALL BE THE RESPONSIBILITY OF THE CONTRACTOR TO VERIFY THE LOCATIONS OF UTILITY LINES AND ADJACENT TO THE WORK AREA. THE CONTRACTOR IS RESPONSIBLE FOR THE PROTECTION OF ALL UTILITY LINES DURING THE CONSTRUCTION PERIOD.

SAFE, CLEARLY MARKED PEDESTRIAN AND VEHICULAR ACCESS TO ALL ADJACENT PROPERTIES MUST BE MAINTAINED THROUGHOUT THE CONSTRUCTION PROCESS.

ALL PLANT MATERIAL QUANTITIES SHOWN ARE APPROXIMATE. CONTRACTOR SHALL BE RESPONSIBLE FOR COMPLETE COVERAGE OF ALL PLANTING BEDS AT SPACING SHOWN.

THE TOP OF ALL ROOT BALLS SHALL BEAR THE SAME RELATIONSHIP TO FINISHED GRADE, AS BORN TO PREVIOUS GRADE AND GROWING CONDITIONS.

ALL ROOT BALLS REMOVED FROM CONTAINERS SHALL BE SCARIFIED PRIOR TO BACKFILLING.

ALL STRAPPING AND TOP 2/3 OF WIRE BASKET MUST BE CUT AWAY AND REMOVED FROM ROOT BALL PRIOR TO BACKFILLING PLANTING PIT. REMOVE TOP 1/3 OF THE BURLAP FROM ROOT BALL.

FOR NEW PLANTING AREAS, REMOVE ALL PAVEMENT, GRAVEL SUB-BASE AND CONSTRUCTION DEBRIS; REMOVE COMPACTED SOIL AND ADD 24" NEW TOPSOIL OR UNCOMPACT AND AMEND THE TOP 24" OF EXISTING SOIL TO MEET TOPSOIL PLANTING MIX STANDARDS FOR TREES. SEE DETAILS THIS SHEET.

THE CONTRACTOR SHALL BE RESPONSIBLE FOR INSTALLING TREES AND SHRUBS THAT WILL MEET BOTH MINIMUM SIZE AND SPACING FOR TREE AND ZONING ORDINANCE COMPLIANCE. FAILURE TO INSTALL PLANT MATERIAL PER THIS PLAN WILL JEOPARDIZE ISSUANCE OF FINAL CERTIFICATE OF OCCUPANCY. CONTRACTOR SHALL BE RESPONSIBLE FOR SCHEDULING INSPECTIONS OF PLANT MATERIAL.

CONTRACTOR SHALL COMPLY WITH ALL APPLICABLE CODES & ORDINANCES REGARDING LANDSCAPING. GENERAL CONTRACTOR IS TO CLEAN THE ENTIRE SITE OF ALL CONSTRUCTION DEBRIS AND TO RAKE ENTIRE SITE.

THE CONTRACTOR SHALL INSTALL BLACK FABRIC PERMEABLE MESH UNDER PLANTING BED MULCH TO PREVENT WEED GROWTH.

CONTRACTOR SHALL MAINTAIN LANDSCAPING FOR AT LEAST 30 DAYS AFTER SODDING AND PLANTING SHRUBS, AND 60 DAYS AFTER SEEDING, OR AS LONG AS IS NECESSARY TO ESTABLISH UNIFORM STRAND OF THE SPECIFIED GRASSES, OR UNTIL SUBSTANTIAL COMPLETION OF THE PROJECT, OR UNTIL ACCEPTANCE OF THE LAWNS AND SHRUBS, WHICHEVER IS LATER.

ALL CONSTRUCTION TO BE IN ACCORDANCE WITH ALL TOWN OF PITTSBORO AND/OR NCDOT STANDARDS AND SPECIFICATIONS.

SURVEY NOTE:

ALL EXISTING SITE AND TOPOGRAPHIC INFORMATION SHOWN BASED ON AN ALTA/ACSM LAND TITLE SURVEY DATED FEBRUARY 15, 2013. PROVIDED BY WHITHERS & RAVENEL. 115 MACKENAN DR, CARY NC 27511. PHONE 919-469-3340

GRAPHIC SCALE IN FEET
0 15 30 60
SCALE 1" = 30 FT

NORTH

No.	REVISIONS	DATE	BY
5	REVISED PER TOWN OF PITTSBORO 3RD COMMENTS	7/30/14	KCG
4	NCDENR EXPRESS REVIEW COMMENTS	7/25/14	KCG
3	NCDENR EXPRESS REVIEW COMMENTS	7/18/14	KCG
2	REVISED PER TOWN OF PITTSBORO 2ND COMMENTS	7/16/14	BTO
1	REVISED PER TOWN OF PITTSBORO 1ST COMMENTS	5/21/14	WJB

Kimley»Horn

© 2014 KIMLEY-HORN AND ASSOCIATES, INC.

333 FAYETTEVILLE STREET, SUITE 600, RALEIGH, NC 27601
PHONE: 919-835-1494 FAX: 919-653-5847
WWW.KIMLEY-HORN.COM

KHA PROJECT 012325022
DATE 01/28/2014
SCALE AS SHOWN
DESIGNED BY BPW
DRAWN BY BNR
CHECKED BY SJM

CHATHAM MEDICAL OFFICE BUILDING

PREPARED FOR
CHATHAM PARK INVESTORS LLC

PITTSBORO NC

NORTH CAROLINA REGISTERED LANDSCAPE ARCHITECT 0492 SALVATORE MUSARRA
7-30-14

LANDSCAPE PLAN

SHEET NUMBER
L-100

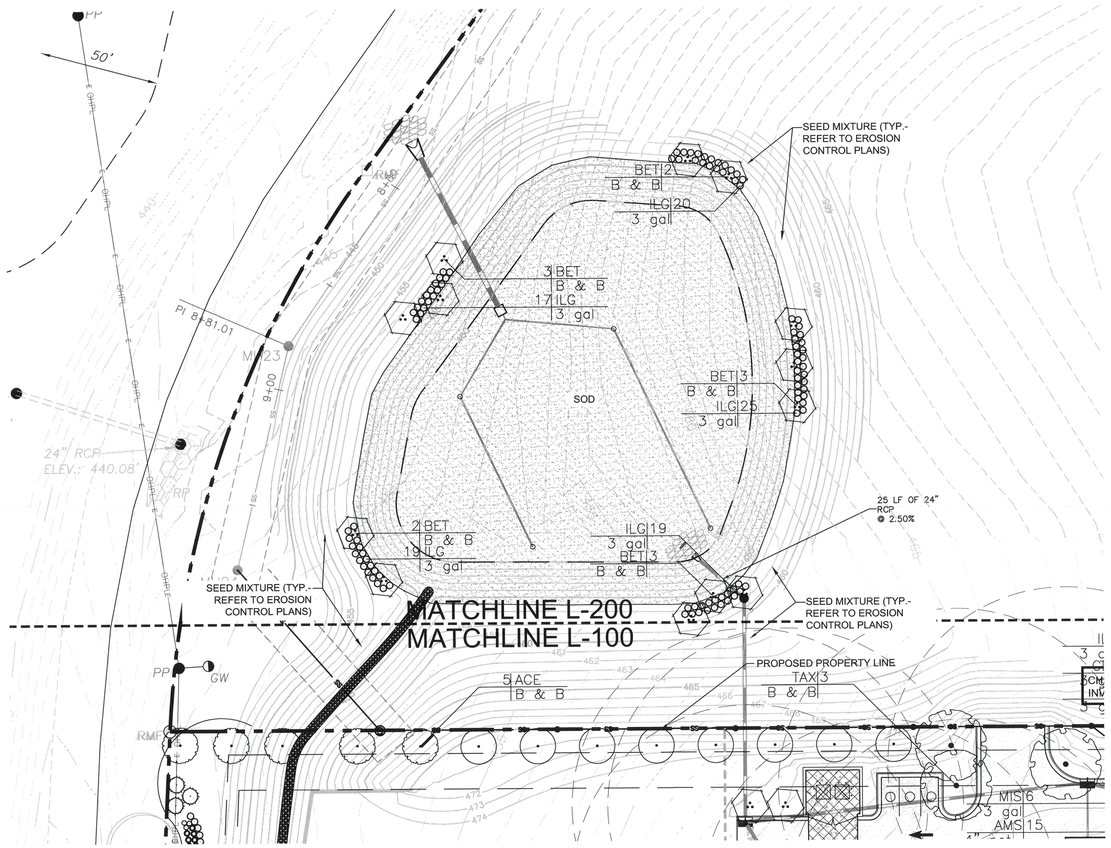

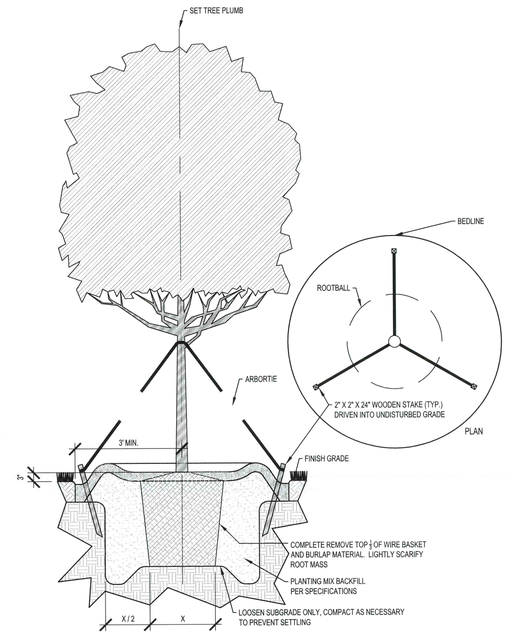

TREE PLANTING NOTES:

1. SET TREE MIN. 3" ABOVE SURROUNDING FINISH GRADE. MEASURED AT BASE OF TRUNK.
2. REDUCE TYPICAL 3" MULCH DEPTH SURROUNDING WOODY TRUNK TO 2" DEEP.

1 / L-200 — TYPICAL TREE PLANTING & GUYING

PLAN & SECTION
SCALE: 1/2"=1'-0"

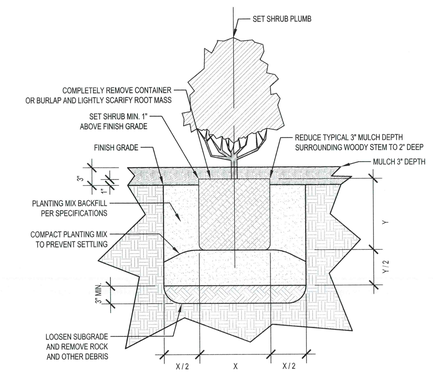

2 / L-200 — TYPICAL SHRUB PLANTING

SECTION
SCALE: 1"=1'-0"

GENERAL LANDSCAPE NOTES:

1. ALL PLANT MATERIAL PRICING SHALL INCLUDE MULCH, BED PREPARATION, AND STAKING.
2. ALL PLANTING BEDS SHALL RECEIVE 3" (THREE INCHES) OF MULCH.

   MULCH TYPE FOR PROJECT: TRIPLE SHREDDED HARDWOOD
3. PLANT MATERIAL SPACING SHOWN ON LANDSCAPE PLANS SHALL OVERRIDE TYPICAL PLANT SPACING INDICATED ON PLANT SCHEDULE. LANDSCAPE CONTRACTOR RESPONSIBLE FOR VERIFYING ALL PLANT SPACING AND MAKING MINOR FIELD ADJUSTMENTS DUE TO UTILITY CONFLICTS.

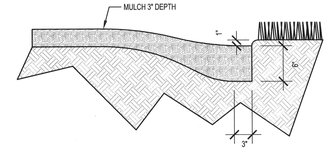

PLANTING BED TRENCH EDGING NOTE:

1. TRENCH EDGE SHALL BE LOCATED BETWEEN PLANTING BED AND ALL TURF OR NATIVE GRASS AREAS.
2. TRENCH EDGE SHALL BE CONSTRUCTED ALONG ALL HARDSCAPE AREAS FOR SIMILAR CONDITION.
3. MAINTAIN POSITIVE DRAINAGE IN ALL PLANTING BEDS.
4. SEE NOTES THIS SHEET FOR TYPE OF MULCH.

3 / L-200 — PLANTING BED TRENCH EDGING

SECTION
SCALE: 1"=1'-0"

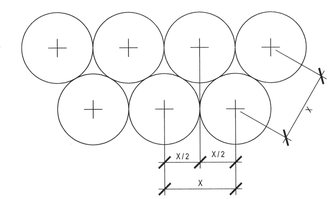

PLANT SPACING NOTES:

1. SEE PLANTING PLAN FOR SHRUB AND GROUNDCOVER AREAS.
2. PLANT MATERIAL SHALL BE INSTALLED IN STRAIGHT AND PARALLEL ROWS UNLESS OTHERWISE SHOWN ON DRAWINGS.
3. SEE PLANTING PLAN AND / OR PLANT SCHEDULE FOR ACTUAL PLANT SPACING.

4 / L-200 — TYPICAL STAGGERED ROW PLANT SPACING

PLAN
SCALE: 1/2"=1'-0"

ALL CONSTRUCTION TO BE IN ACCORDANCE WITH ALL TOWN OF PITTSBORO AND/OR NCDOT STANDARDS AND SPECIFICATIONS.

SURVEY NOTE:

ALL EXISTING SITE AND TOPOGRAPHIC INFORMATION SHOWN BASED ON AN ALTA/ACSM LAND TITLE SURVEY DATED FEBRUARY 15, 2013. PROVIDED BY WHITHERS & RAVENEL. 115 MACKENAN DR, CARY NC 27511. PHONE 919-469-3340

PLANT SCHEDULE

TREES	QTY	BOTANICAL NAME	COMMON NAME	CONT	CAL	SIZE		REMARKS
ACE	26	ACER BUERGERIANUM	TRIDENT MAPLE	B & B	2"CAL			
BET	16	BETULA NIGRA	RIVER BIRCH MULTI-TRUNK	B & B	2"CAL	12'-14' H		3 CANES
CAR	4	CARPINUS BETULUS	EUROPEAN HORNBEAM	B & B	2"CAL			
ILN	28	ILEX X 'NELLIE R STEVENS'	NELLIE STEVENS HOLLY	B & B				
LAG	11	LAGERSTROEMIA X 'NATCHEZ'	WHITE CRAPE MYRTLE MULTI-TRUNK	B & B	3"CAL	10'-12'		3 CANES
MAG	17	MAGNOLIA X SOULANGIANA	SAUCER MAGNOLIA	B & B	1.5"CAL	8'-10' H		
QUE	19	QUERCUS RUBRA 'SCARLET'	RED OAK	B & B	4"CAL			
TAX	3	TAXODIUM DISTICHUM 'SOFINE'	AUTUMN GOLD BALD CYPRESS	B & B	4"CAL			
ZEL	5	ZELKOVA SERRATA 'VILLAGE GREEN'	SAWLEAF ZELKOVA	B & B	4"CAL			
SHRUBS	**QTY**	**BOTANICAL NAME**	**COMMON NAME**	**SIZE**	**WIDTH**	**HEIGHT**	**SPACING**	**REMARKS**
CLE	270	CLETHRA ALNIFOLIA 'COMPACTA'	COMPACT SUMMERSWEET	3 GAL	18"	18"	36" o.c.	
ERA	117	ERAGROSTIS CURVULA	WEEPING LOVEGRASS	1 GAL	18"	12"	36" o.c.	
ILE	62	ILEX VOMITORIA 'NANA'	DWARF YAUPON	3 GAL	15"	15"	24" o.c.	
ILG	833	ILEX GLABRA 'COMPACTA'	COMPACT INKBERRY	3 GAL	24"	24"	36" o.c.	
ITE	240	ITEA VIRGINICA 'LITTLE HENRY' TM	VIRGINIA SWEETSPIRE	3 GAL	24"	24"	36" o.c.	
MIS	44	MISCANTHUS SINENSIS 'ADAGIO'	ADAGIO EULALIA GRASS	3 GAL	24"	24"	36" o.c.	
MUH	632	MUHLENBERGIA CAPILLARIS	PINK MUHLY	1 GAL	18"	18"	30" o.c.	FULL POT
PEN	480	PENNISETUM ALOPECUROIDES 'LITTLE BUNNY'	LITTLE BUNNY FOUNTAIN GRASS	1 GAL	12"	12"	24" o.c.	FULL POT
GROUND COVERS	**QTY**	**BOTANICAL NAME**	**COMMON NAME**	**CONT**	**WIDTH**	**HEIGHT**	**SPACING**	**REMARKS**
AMS	207	AMSONIA TABERNAEMONTANA 'BLUE ICE'	BLUE ICE STAR FLOWER	4" POT	12"	12"	24" o.c.	FULL POT
ANN	212	ANNUAL MIX	SEASONAL MIX	4" POT			12" o.c.	
COR	128	COREOPSIS X 'CREME BRULEE'	CREME BRULEETICKSEED	4" POT	12"	12"	30" o.c.	FULL POT
CYN	37,392 SF	CYNODON DACTYLON	BERMUDA GRASS	SOD				

No.	REVISIONS	DATE	BY
5	REVISED PER TOWN OF PITTSBORO 3RD COMMENTS	7/30/14	KCG
4	NCDENR EXPRESS REVIEW COMMENTS	7/25/14	KCG
3	NCDENR EXPRESS REVIEW COMMENTS	7/18/14	KCG
2	REVISED PER TOWN OF PITTSBORO 2ND COMMENTS	7/16/14	BTO
1	REVISED PER TOWN OF PITTSBORO 1ST COMMENTS	5/21/14	WJB

Kimley»Horn
© 2014 KIMLEY-HORN AND ASSOCIATES, INC.
333 FAYETTEVILLE STREET, SUITE 600, RALEIGH, NC 27601
PHONE: 919-835-1494 FAX: 919-653-5847
WWW.KIMLEY-HORN.COM

KHA PROJECT	012325022
DATE	01/28/2014
SCALE	AS SHOWN
DESIGNED BY	BPW
DRAWN BY	BNR
CHECKED BY	SJM

CHATHAM MEDICAL OFFICE BUILDING

PREPARED FOR

CHATHAM PARK INVESTORS LLC

PITTSBORO NC

NORTH CAROLINA PROFESSIONAL SEAL 040422 LANDSCAPE ARCHITECTURE SANDRE MUSARRA

7/30/14

LANDSCAPE DETAILS

SHEET NUMBER

L-200

Plotted By:Hoefler, Melissa Sheet Set:Chatham Medical Office Building Layout:L-200 LANDSCAPE DETAILS July 30, 2014 09:31:21am K:\RDT_LDEV\012325022_Chatham MOB\Planning Phase\15_CAD Files\PlanSheets\L-200 LANDSCAPE DETAILS.dwg
This document, together with the concepts and designs presented herein, as an instrument of service, is intended only for the specific purpose and client for which it was prepared. Reuse of and improper reliance on this document without written authorization and adaptation by Kimley-Horn and Associates, Inc. shall be without liability to Kimley-Horn and Associates, Inc.

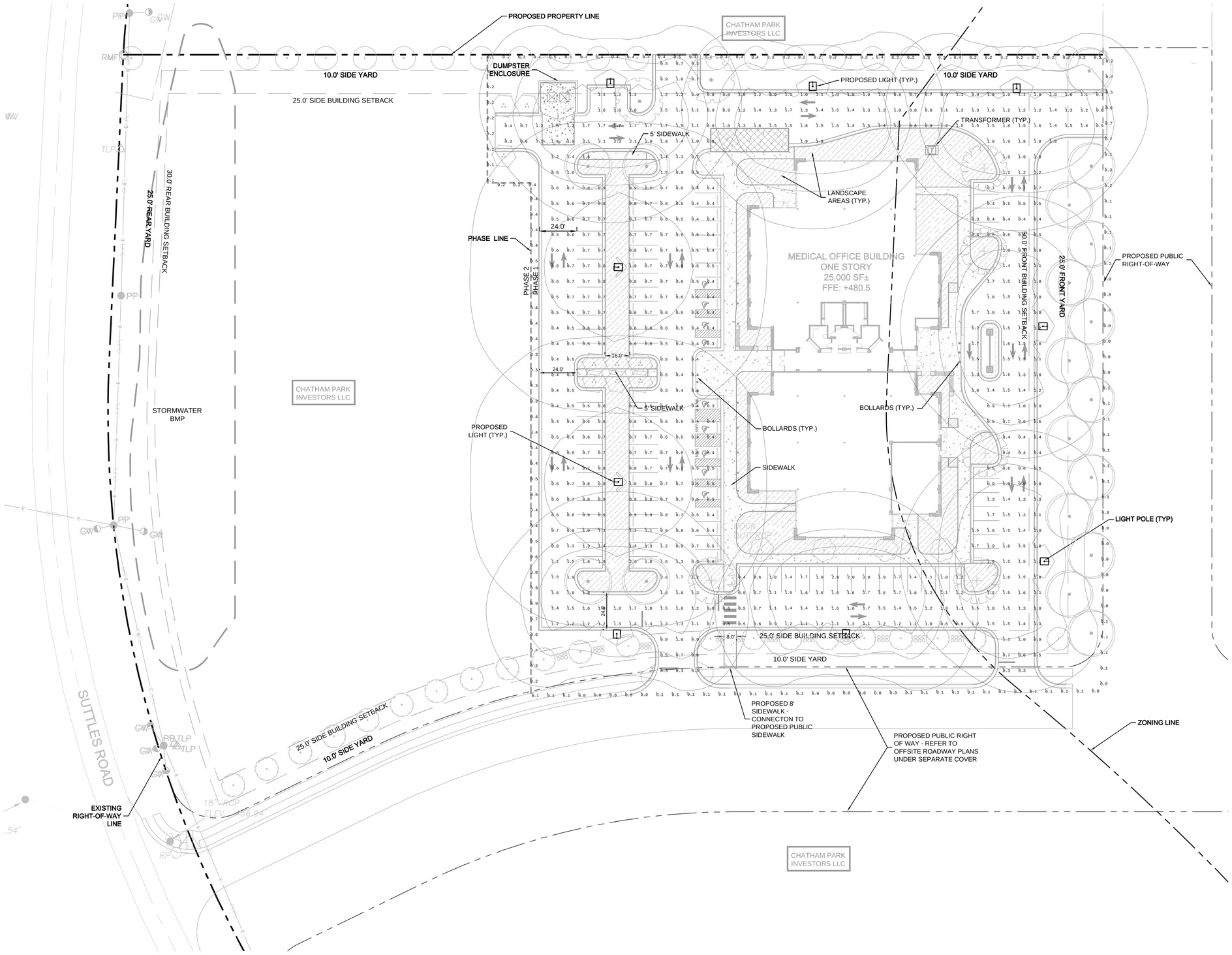

PRELIMINARY SITE LIGHTING NOTES:

1. POLE TYPE:

   FIBER GLASS
   DECORATIVE SQUARE METAL POLE
   30' MOUNTING HEIGHT

2. PHOTOMETRIC INFO:

   AVERAGE = 1.00 FC
   MAXIMUM = 2.2 FC
   MINIMUM = 0.3 FC
   UNIFORMITY = 3.33

LEGEND

PROPOSED LIGHT FIXTURE

PRELIMINARY FIXTURE CUT SHEET

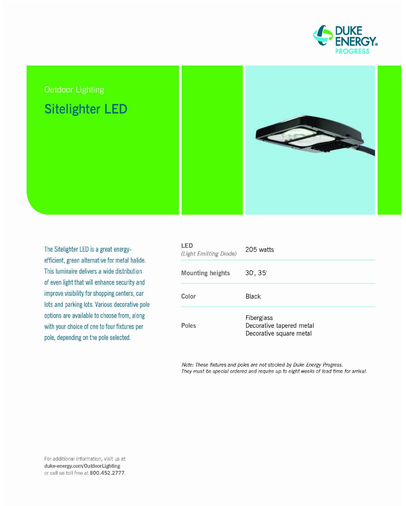

ALL CONSTRUCTION TO BE IN ACCORDANCE WITH ALL TOWN OF PITTSBORO AND/OR NCDOT STANDARDS AND SPECIFICATIONS.

SURVEY NOTE:

ALL EXISTING SITE AND TOPOGRAPHIC INFORMATION SHOWN BASED ON AN ALTA/ACSM LAND TITLE SURVEY DATED FEBRUARY 15, 2013. PROVIDED BY WHITHERS & RAVENEL. 115 MACKENAN DR, CARY NC 27511. PHONE 919-469-3340

GRAPHIC SCALE IN FEET
0 15 30 60
SCALE 1" = 30 FT

NORTH

No.	REVISIONS	DATE	BY
1	REVISED PER TOWN OF PITTSBORO 1ST COMMENTS	5/21/14	WJB

Kimley»Horn

© 2014 KIMLEY-HORN AND ASSOCIATES, INC.

333 FAYETTEVILLE STREET, SUITE 600, RALEIGH, NC 27601
PHONE: 919-835-1494 FAX: 919-653-5847
WWW.KIMLEY-HORN.COM

KHA PROJECT 012325022
DATE 01/28/2014
SCALE AS SHOWN
DESIGNED BY BRW
DRAWN BY BTG
CHECKED BY BRW

CHATHAM MEDICAL OFFICE BUILDING

PREPARED FOR

CHATHAM PARK INVESTORES LLC

PITTSBORO NC

NORTH CAROLINA PROFESSIONAL ENGINEER SEAL 036404 J. RAVIS FLUDT

PRELIMINARY PLANS NOT FOR CONSTRUCTION PURPOSES

SHEET NUMBER

LT-100

SITE LIGHTING PLAN

Plotted By:Guest, Ricky Sheet Set:Chatham Medical Office Building Layout:LT-100 SITE LIGHTING May 21, 2014 01:53:33pm K:\RDT_LCEV\012325022_chatham mob\planning phase\15-cad files\plansheets\LT-100 - SITE LIGHTING PLAN.dwg
This document, together with the concepts and designs presented herein, as an instrument of service, is intended only for the specific purpose and client for which it was prepared. Reuse of and improper reliance on this document without written authorization and adaptation by Kimley-Horn and Associates, Inc. shall be without liability to Kimley-Horn and Associates, Inc.