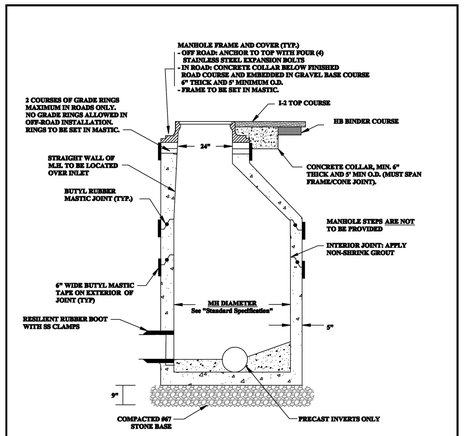

MANHOLES TO BE PRECAST REINFORCED CONCRETE PER ASTM C478

REVISIONS	
DATE	DESCRIPTION

PRECAST MANHOLE

NOT TO SCALE

TOWN OF PITTSBORO
STANDARD CONSTRUCTION DETAIL
STANDARD NO. 1

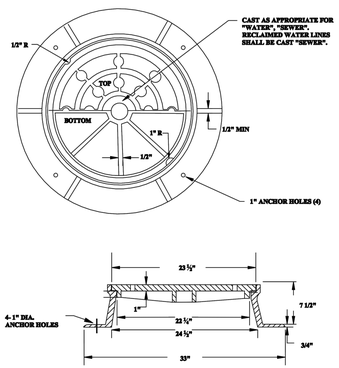

NOTES:

1. ALL CASTINGS TO BE FREE FROM SAND HOLES. NO PLUGGING ALLOWED.
2. MACHINE ALL CONTACT SURFACES BETWEEN RING AND COVER.
3. PROVIDE TWO PICK HOLES IN COVER.
4. PROVIDE TWO 1" DIA VENT HOLES IN COVER.
5. MINIMUM WEIGHTS: COVER - 120 LBS. RING - 150 LBS.
6. ASTM A48, MIN. CLASS 30. TRAFFIC BEARING TO BE MIN. CLASS 35.
7. ALL DIMENSIONS +/-

REVISIONS	
DATE	DESCRIPTION

STANDARD MANHOLE FRAME & COVER

NOT TO SCALE

TOWN OF PITTSBORO
STANDARD CONSTRUCTION DETAIL
STANDARD NO. 4

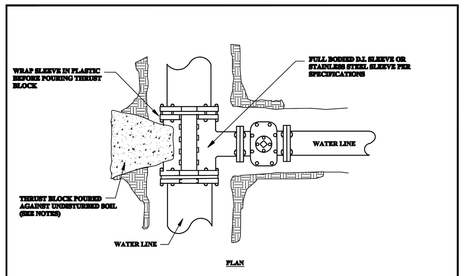

NOTES:

1. TAPPING SLEEVE WILL BE MUELLER #H-615 OR APPROVED EQUAL.
2. CONCRETE THRUST BLOCK WILL NOT CONTACT BOLTS OR ENDS OF MECHANICAL JOINT FITTINGS.
3. SEE APPROPRIATE STANDARD DETAILS FOR THRUST BLOCK AND THRUST BLOCK DIMENSIONS.

REVISIONS	
DATE	DESCRIPTION

TAPPING SLEEVE AND VALVE ASSEMBLY

NOT TO SCALE

TOWN OF PITTSBORO
STANDARD CONSTRUCTION DETAIL
STANDARD NO. 7

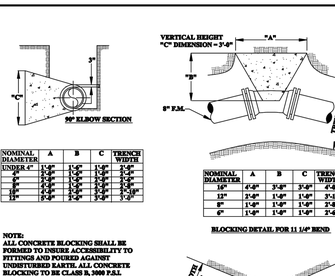

NOMINAL DIAMETER	A	B	C	TRENCH WIDTH
UNDER 4"	2'-0"	1'-0"	1'-0"	2'-0"
4"	2'-0"	1'-0"	1'-0"	2'-0"
6"	2'-0"	1'-0"	1'-0"	2'-0"
8"	2'-0"	1'-0"	1'-0"	2'-0"
12"	2'-0"	1'-0"	1'-0"	2'-0"

BLOCKING DETAIL FOR 90 DEGREE ELBOWS

NOMINAL DIAMETER	A	B	C	TRENCH WIDTH
16"	4'-0"	3'-0"	3'-0"	4'-0"
12"	3'-0"	1'-0"	1'-0"	3'-10"
8"	1'-0"	1'-0"	1'-0"	2'-0"
6"	1'-0"	1'-0"	1'-0"	2'-0"

BLOCKING DETAIL FOR 11 1/4° BEND

NOMINAL DIAMETER	A	B	C	TRENCH WIDTH
16"	5'-0"	3'-0"	3'-0"	5'-0"
12"	3'-0"	1'-0"	1'-0"	3'-0"
8"	2'-0"	1'-0"	1'-0"	2'-0"
6"	2'-0"	1'-0"	1'-0"	2'-0"

BLOCKING DETAIL FOR 45° & 22 1/2° BENDS

NOTE:
ALL CONCRETE BLOCKING SHALL BE FORMED TO INSURE ACCESSIBILITY TO FITTINGS AND POURED AGAINST UNDISTURBED EARTH. ALL CONCRETE BLOCKING TO BE CLASS B, 3000 P.S.I.

REVISIONS	
DATE	DESCRIPTION

THRUST BLOCKING

NOT TO SCALE

TOWN OF PITTSBORO
STANDARD CONSTRUCTION DETAIL
STANDARD NO. 17

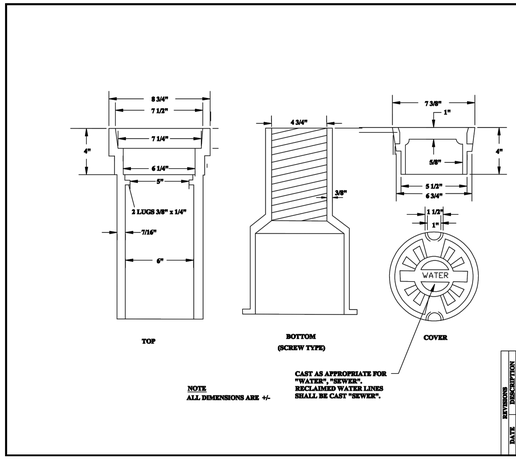

NOTE
ALL DIMENSIONS ARE +/-

REVISIONS	
DATE	DESCRIPTION

STANDARD VALVE BOX

NOT TO SCALE

TOWN OF PITTSBORO
STANDARD CONSTRUCTION DETAIL
STANDARD NO. 19

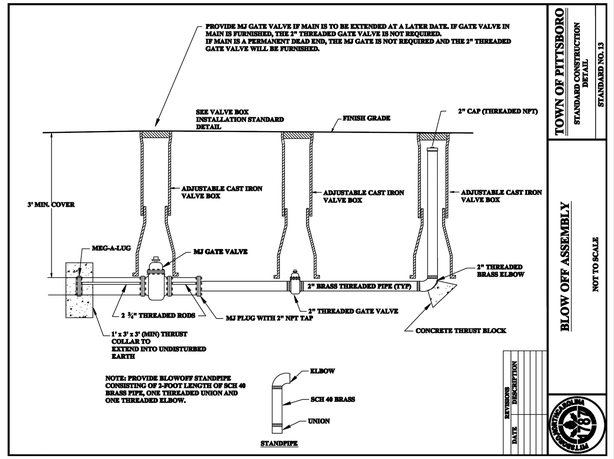

REVISIONS	
DATE	DESCRIPTION

BLOW OFF ASSEMBLY

NOT TO SCALE

TOWN OF PITTSBORO
STANDARD CONSTRUCTION DETAIL
STANDARD NO. 13

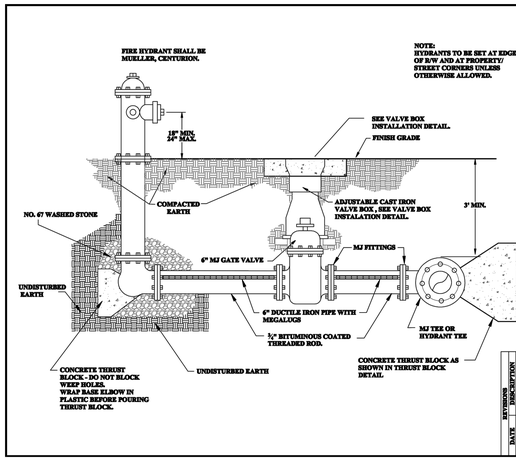

REVISIONS	
DATE	DESCRIPTION

FIRE HYDRANT INSTALLATION ASSEMBLY

NOT TO SCALE

TOWN OF PITTSBORO
STANDARD CONSTRUCTION DETAIL
STANDARD NO. 6

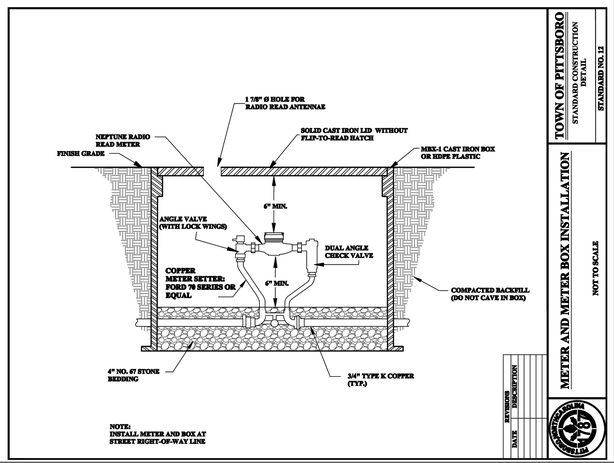

REVISIONS	
DATE	DESCRIPTION

METER AND METER BOX INSTALLATION

NOT TO SCALE

TOWN OF PITTSBORO
STANDARD CONSTRUCTION DETAIL
STANDARD NO. 12

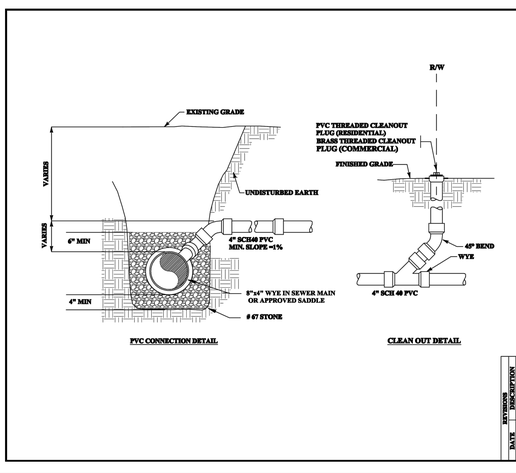

REVISIONS	
DATE	DESCRIPTION

SEWER SERVICE CONNECTION AND CLEAN OUT DETAIL

NOT TO SCALE

TOWN OF PITTSBORO
STANDARD CONSTRUCTION DETAIL
STANDARD NO. 14

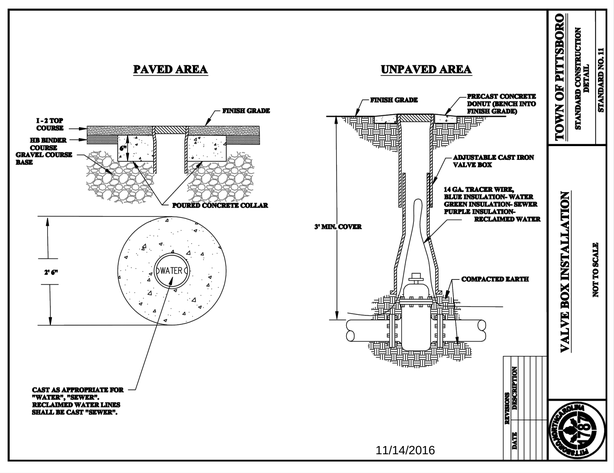

11/14/2016

REVISIONS	
DATE	DESCRIPTION

VALVE BOX INSTALLATION

NOT TO SCALE

TOWN OF PITTSBORO
STANDARD CONSTRUCTION DETAIL
STANDARD NO. 11

NORTH CAROLINA PROFESSIONAL SEAL 16941 ENGINEER SAMIR W. BAHHO

PRELIMINARY PLAN
DO NOT USE FOR CONSTRUCTION FOR REVIEW BY LOCAL OFFICIALS AND STATE OF NORTH CAROLINA.

SAMIR W. BAHHO, PE
CIVIL & STRUCTURAL ENGINEERING SERVICES, PLLC.
4612 KAPLAN DRIVE
RALEIGH, NORTH CAROLINA 27606
TEL: (919) 851-1642
BUSINESS LICENSE F-0537

PROJECT:
WHISPERING MEADOWS SUBDIVISION
OWNER: WINDSTAR PROPERTIES, LLC.
WATER & SEWER DETAILS
CHATHAM COUNTY NORTH CAROLINA
CENTER TOWNSHIP
WATER & SEWER DETAILS

REVISIONS

NO.	DATE	DESCRIPTION	BY:
2	03.13	EROSION AND SEDIMENT CONTROL PHASING PLAN	REB
3	04.13	ADD EROSION CONTROL COMMENTS	REB

DATE: 10.04.11	SCALE: NOTED
DESIGNED: SWB	CHECKED: SWB
DRAWN: REB	APPROVED: WM

SHEET: W&S DETAILS 6 OF 10
CAD FILE: WM
PROJECT NO: 2011.09