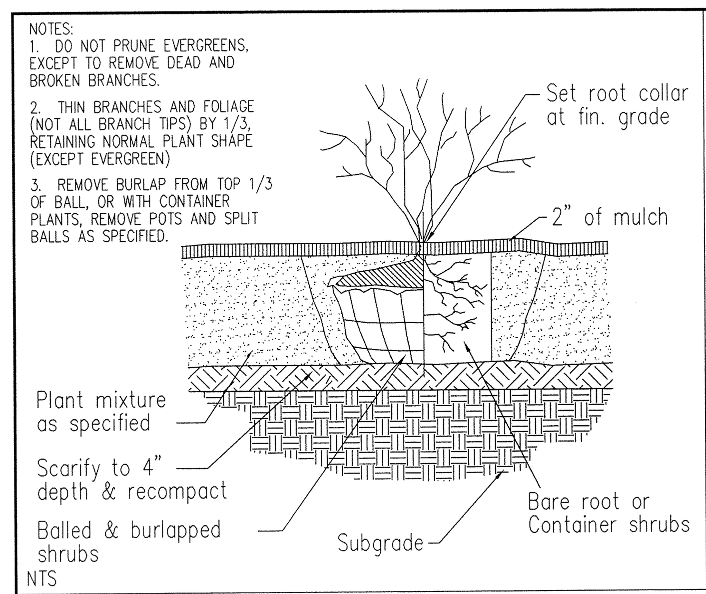

1 SHRUB PLANTING

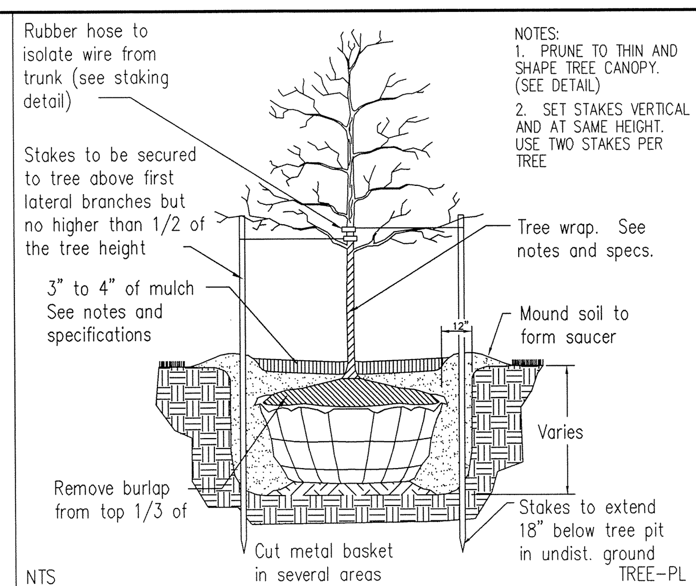

2 TREE PLANTING

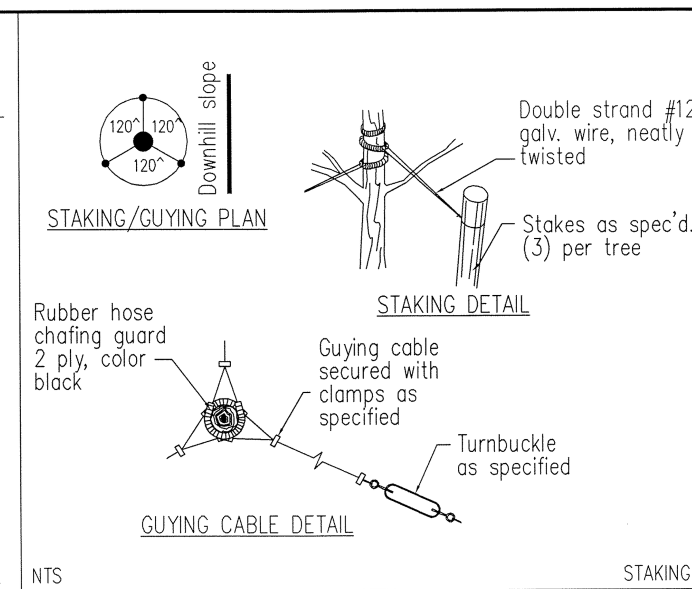

3 TREE STAKING AND GUYING

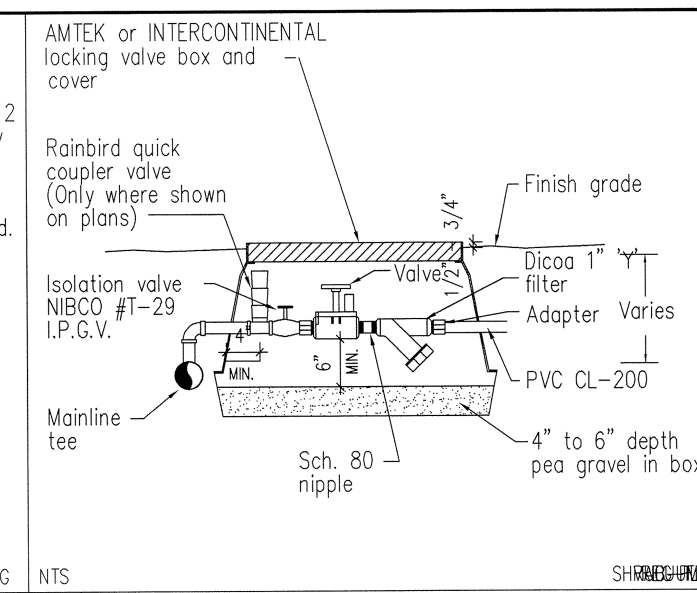

4 VALVE, REGULATOR, & FILTER

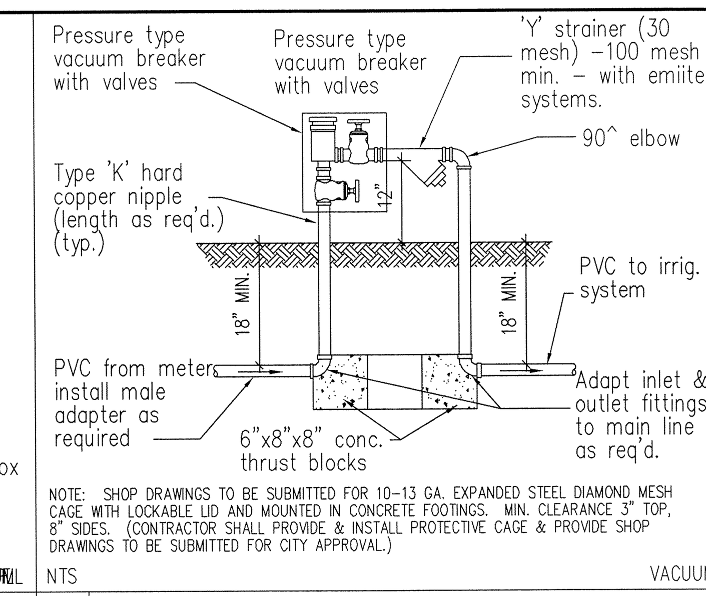

5 PRESSURE TYPE VACUUM BRKR.

LANDSCAPE CALCULATION

PARKING LOT LANDSCAPING

38 PARKING SPACES @ 0.1 LARGE TREE/ SPACE = 4 TREES REQUIRED
38 PARKING SPACES @ 0.125 SMALL TREE/SPACE = 5 TREES REQUIRED

811 Know what's **below.** **Call** before you dig.

0 10 20
GRAPHIC SCALE: 1 INCH = 20 FEET

N
NC GRID NAD 83

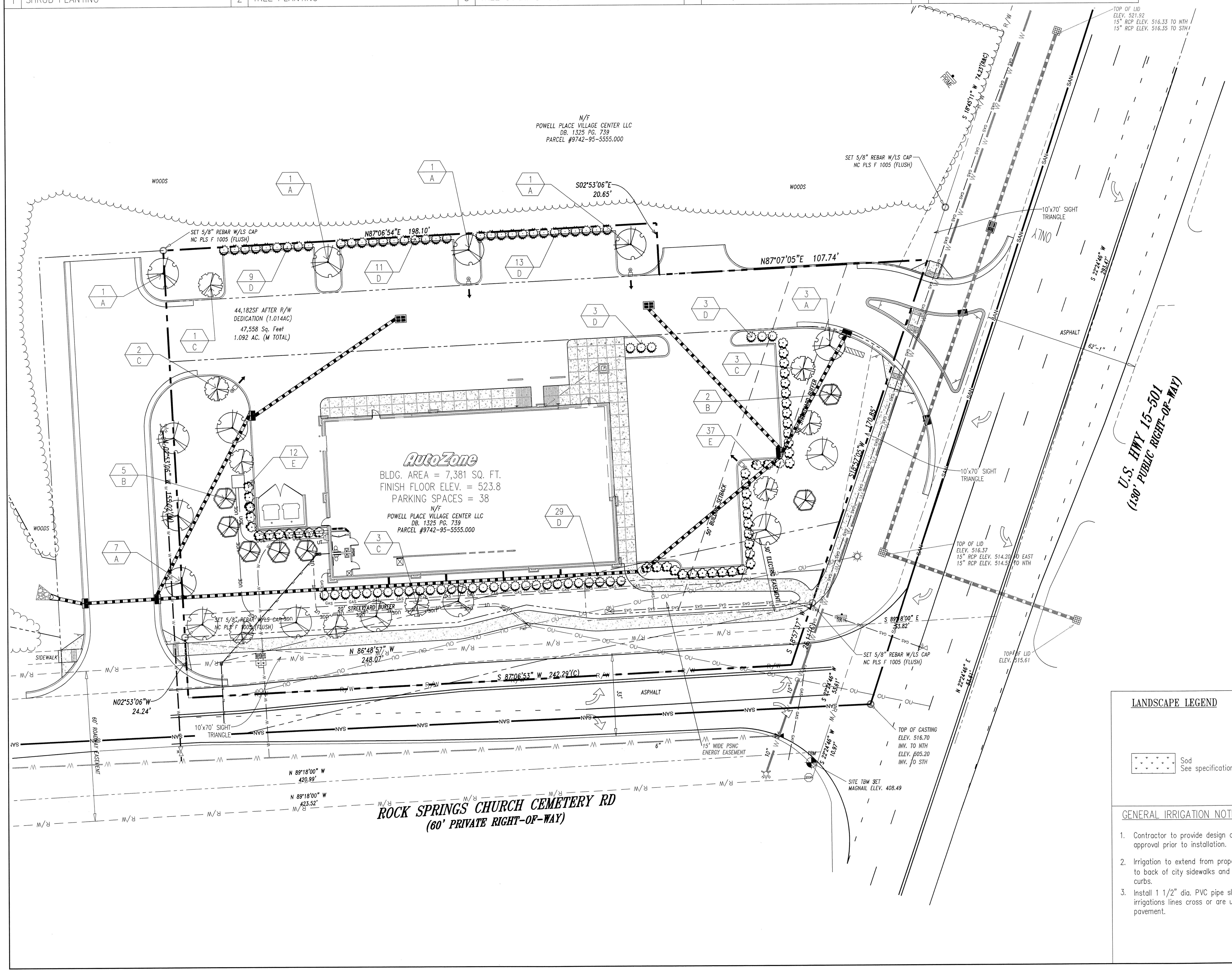

SEEDING MIXTURE:

AGRICULTURE LIMESTONE:	2 TONS/ACRE (3 TONS/ACRE IN CLAY SOILS)
FERTILIZER:	1,000 LBS/ACRE - 10-10-10
SUPERPHOSPHATE:	500 LBS/ACRE - 20% ANALYSIS
MULCH:	2 TONS/ACRE - SMALL GRAIN STRAW
ANCHOR:	ASPHALT EMULSION AT 400 GALS/ACRE

TEMPORARY SEEDING SPECIFICATIONS/SCHEDULE

Date	Type	Planting Rate
March - Oct.	Browntop Millet	40 lbs/acre
Nov. - Feb.	Winter Rye	120 lbs/acre

SEEDING SPECIFICATIONS/SCHEDULE

FOR SHOULDERS, SIDE DITCHES, SLOPES (MAX 3:1)

Date	Type	Planting Rate
Aug 15 - Nov 1	Tall Fescue	300 lbs/acre
Nov 1 - Mar 1	Tall Fescue & Abruzzi Rye	300 lbs/acre
Mar 1 - Apr 15	Tall Fescue	300 lbs/acre
Apr 14 - Jun 30	Hulled Common Bermuda Grass	25 lbs/acre
Jul 1 - Aug 15	Tall Fescue & Browntop Millet or Sorghum-Sudan Hybrids	240 lbs/acre-Tall Fescue; 35 lbs/acre Browntop Millet 30 lbs/acre Sorghum-Sudan Hybrids

FOR SHOULDERS, SIDE DITCHES, SLOPES (3:1 - 2:1)

Date	Type	Planting Rate
Mar 1 - Jun 1	Sericea Lespedeza (scarified) & use the following combinations:	50 lbs/acre (Serica Lespedeza)
Mar 1 - Apr 15	Add Tall Fescue	240 lbs/acre
Mar 1 - Jun 30	Or add Julled Common Bermuda Grass	25 lbs/acre
Jun 1 - Sep 1	Tall Fescue & Browntop Millet or Sorghum-Sudan Hybrids	240 lbs/acre Tall Fescue 35 lbs/acre Browntop Millet 30 lbs/acre Sorghum-Sudan
Hybrids		
Sep 1 - Mar 1	Sericea Lespedeza (Unhulled-Unscarafied & Tall Fescue	70 lbs/acre Sericea Lespedeza 240 lbs/acre Tall Fescue
Nov 1 - Mar 1	Add Abruzzi Rye	25 lbs/acre

CONSULT S&EC ENGINEER FOR ADDITIONAL INFORMATION CONCERNING OTHER ALTERNATIVES FOR VEGETATION OF DENUDED AREAS. THE ABOVE VEGETATION RATES ARE THOSE THAT DO WELL UNDER LOCAL CONDITIONS; OTHER SEEDING RATE COMBINATIONS ARE POSSIBLE.

*** TEMPORARY: RESEED ACCORDING TO OPTIMUM SEASON FOR DESIRED PERMANENT VEGETATION. DO NOT ALLOW TEMPORARY COVER TO GROW MORE THAN 12" IN HEIGHT BEFORE MOWING; OTHERWISE, FESCUE MAY BE SHADED OUT.

GENERAL LANDSCAPE NOTES:

1. All landscape areas to be grass common to region except where other plant material is called for.

2. All trees and shrubs to be planted in mulch beds with aluminum edge strips to separate turf grass areas.

3. Any landscape areas disturbed by construction shall be scarified to a depth of 2", graded smooth to allow for positive drainage. For any landscape area so designated to remain whether on or off site, remove weeds, rocks, construction items, etc., scarify area, re-seed and fertilize. All R.O.W. curb and gutters are to be cleaned of debris.

4. Finished grade in landscape islands shall be installed so that they are 1" lower than the top of the surrounding curbs.

5. The Contractor shall provide a WATER PERMEABLE WEED MAT for all planting beds !!!

6. All plant materials to receive permanent underground automatic irrigation system designed by an irrigation contractor licensed by the State. The Contractor shall provide drawings for approval by the City prior to installation.

7. Grass and irrigation to extend from property lines to back of city sidewalks and/or curbs.

8. Install pipe sleeves where irrigation lines cross or are under pavement. All sleeves shall be twice the diameter of the pipe(s) it houses.

9. Turf Notes: Select low maintenance hybrid turf from local grower. Test soil for proper pH for select sod. Amend soil twith organic material, fertilizer, and finish grade. Stagger all sod seams, fill any gaps with sand, water, and roll smooth. Contractor to replace any dead sod within one growing season.

10. Slope stabilization - Hydroseed with compatible turf seed and overlay turf mats on all slopes greater than 3:1 on site, if sod can not be staked properly. Use Pyramat, by Synthetic Industries, or equal. Contractor to repair all areas of erosion to satisfaction to establish proper turf. within one year.

LANDSCAPE LEGEND

Sod See specifications

Large deciduous Tree -Type 'A'

Evergreen Tree -Type 'B'

Small flowering Tree -Type 'C'

Evergreen shrub -Type 'D'

Evergreen shrub -Type 'E'

Quantity — 1
Type — A

GENERAL IRRIGATION NOTES

1. Contractor to provide design drawings for approval prior to installation.
2. Irrigation to extend from property lines to back of city sidewalks and / or curbs.
3. Install 1 1/2" dia. PVC pipe sleeves where irrigations lines cross or are under pavement.

PLANT LIST

QUANTITY	KEY	BOTANICAL/COMMON NAME	SIZE	ROOT TYPE	REMARKS
	A	Zelkova serrata	3.5" CALIPER	B&B	10' HEIGHT
		Japanese Zelkova			
	B	Magnolia gradniflora / Southern Magnolia	--	B&B	6' HEIGHT
	C	Magnolia x soulanginna	--	B&B	4' HEIGHT
		Saucer Magnolia			
	D	Rhododendron obtusum	24" HEIGHT	3 GAL	
		Kurume Azalea			
	E	Abelia Grandiflora	30" HEIGHT	3 GAL	
		Glossy Abelia			

TRIANGLE SITE DESIGN

CONSULTANT:
TRIANGLE SITE DESIGN, PLLC
4006 BARRETT DR, STE 203
RALEIGH, NC 27609
(919) 553-6570
LICENSE #P-0619

SEAL:

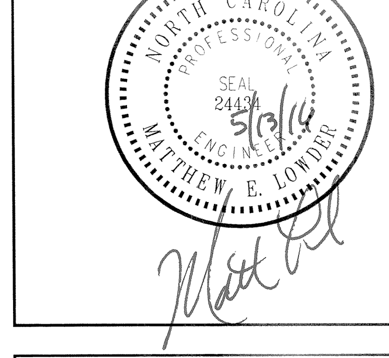

AutoZone

STORE NUMBER: 4378
US Highway 15-501 &
Rock Springs Church Cemetery Road
Pittsboro, NC
Chatham County

OWNER/DEVELOPER:
AUTOZONE DEVELOPMENT LLC.
ATTN. WADE DAVIS
123 S. FRONT STREET
3RD FLOOR
MEMPHIS, TN 38103-2107
PHONE: (901) 495-8701
FAX: (901) 495-8969
wade.davis@autozone.com

For Bidding & Contractor Information Contact:
F.W. Dodge Plan Room Tel: (615) 884-1017

REVISIONS:

5/13/16 REVISED PER TOWN OF PITTSBORO REVIEW

LAYOUT COORD:	MEL
PLANNING MGR.	MEL
DRAWING BY:	MEL
DATE:	April 18, 2016
JOB NUMBER:	010052

TITLE:

LANDSCAPE PLAN

SHEET NUMBER:

L1.0

COMMENTS: