SITE PLANS for

WALKER AUTO PARTS

630 EAST STREET, U.S.HIGHWAY 64 BUSINESS
PITTSBORO, N.C.

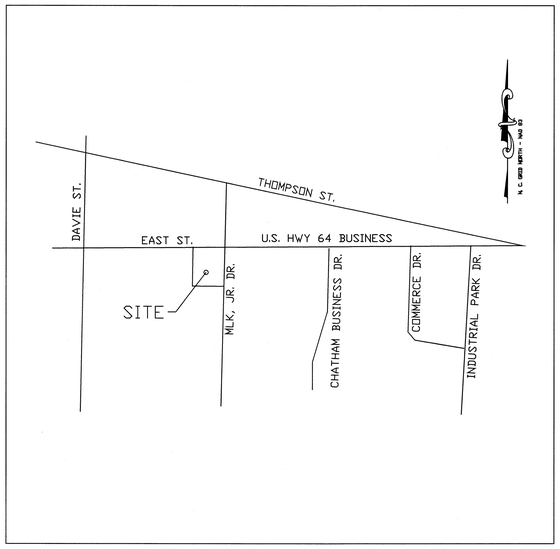

VICINITY MAP
NOT TO SCALE

INDEX OF SHEETS

EXISTING CONDITIONS	EX.1
SITE PLAN	C1.0
GRADING & DRAINAGE PLAN	C2.0
LANDSCAPE PLAN	C3.0
UTILITY PLAN	C4.0
EROSION CONTROL PLAN	C5.0
EROSION CONTROL DETAILS	C6.0
UTILITY DETAILS	C7.0
RECORDED PLAT	

ALL CONSTRUCTION TO BE IN ACCORDANCE WITH ALL TOWN OF PITTSBORO, CHATHAM CO. & NCDOT STANDARDS, SPECIFICATIONS AND DETAILS

PREPARED BY

BLAKELY DESIGN GROUP
700 EXPOSITION PLACE, SUITE 105
RALEIGH, N. C. 27615
(919) 870-1868 FAX 870-0752

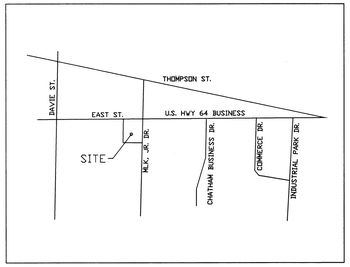

VICINITY MAP

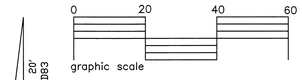

LEGEND and NOMENCLATURE

SYMBOLS

- Ex. iron pipe/rod or nail
- Ex. concrete monument
- New iron pipe
- Calculated point
- Cable pedestal
- Telephone pedestal
- Electric pedestal
- Fiber-optic marker
- Traffic signal box
- Water meter
- Fire hydrant
- Valve (water or gas)
- Sanitary sewer manhole
- Sanitary sewer cleanout
- Storm curb inlet
- Drainage inlet (w/ grate)
- Storm drain manhole
- Utility pole
- Lamp post
- Signal pole
- Guy wire
- Sign post

LINETYPES

- —— X —— Fence
- —— OU —— Overhead utility
- —— W —— Water
- —— SS —— Sanitary sewer
- —— SD —— Storm drain

ABBREVIATIONS

DB	Deed Book
PB or BM	Plat Book / Book of Maps
N/F	Now or formerly
Pg.	Page
SF	Square feet
Ac.	Acres
R/W	Right-of-way
NCSR	North Carolina State Route
NCDOT	North Carolina Dept. of Transportation
R/W	Right-of-way
Ex.	Existing
RCP	Reinforced concrete pipe
PVC	Polyvinyl chloride pipe
(M)	Measured
(P)	Platted
(D)	Deed

LINE TABLE

LINE	LENGTH	BEARING
L1	25.02	N 18°24'56" W

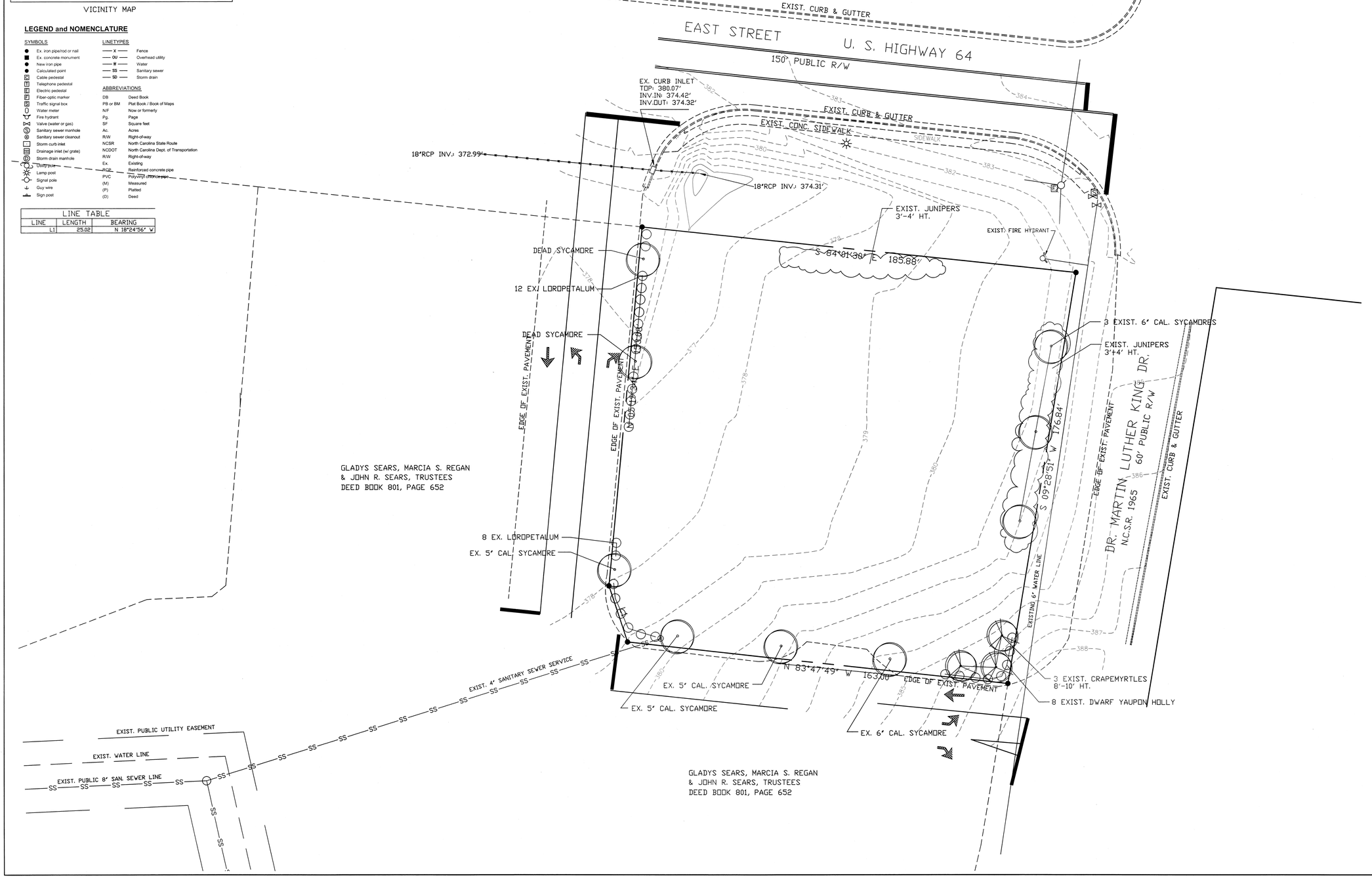

BLAKELY DESIGN GROUP
Landscape Architecture Site Planning
700 Exposition Place, Suite 105, Raleigh, North Carolina 27615
Telephone (919) 870-1868 Fax (919) 870-0752
E-Mail - taylor@blakelydesign.net

EXISTING CONDITIONS PLAN

WALKER AUTO PARTS

630 EAST STREET, U.S. HIGHWAY 64 BUSINESS, PITTSBORO, N.C.

DATE	OCT.28, 14
SCALE	1"=20'
DRAWN	BTB
JOB NO.	
REVISIONS	
SHEET	EX.0

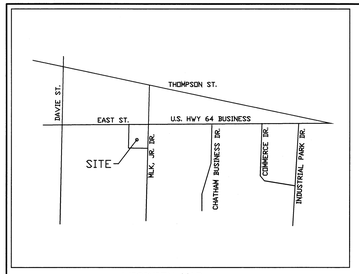

VICINITY MAP

SCALE: 1" = 20'
NC GRID, NAD83

0 20 40 60
graphic scale

LEGEND and NOMENCLATURE

SYMBOLS

- Ex. iron pipe/rod or nail
- Ex. concrete monument
- New iron pipe
- Calculated point
- Cable pedestal
- Telephone pedestal
- Electric pedestal
- Fiber-optic marker
- Traffic signal box
- Water meter
- Fire hydrant
- Valve (water or gas)
- Sanitary sewer manhole
- Sanitary sewer cleanout
- Storm curb inlet
- Drainage inlet (w/ grate)
- Storm drain manhole
- Utility pole
- Lamp post
- Signal pole
- Guy wire
- Sign post

LINETYPES

- Fence
- Overhead utility
- Water
- Sanitary sewer
- Storm drain

ABBREVIATIONS

DB	Deed Book
PB or BM	Plat Book / Book of Maps
N/F	Now or formerly
Pg.	Page
SF	Square feet
Ac.	Acres
R/W	Right-of-way
NCSR	North Carolina State Route
NCDOT	North Carolina Dept. of Transportation
R/W	Right-of-way
Ex.	Existing
RCP	Reinforced concrete pipe
PVC	Polyvinyl chloride pipe
(M)	Measured
(P)	Platted
(D)	Deed

LINE TABLE

LINE	LENGTH	BEARING
L1	25.02	N 18°24'56" W

SITE DATA

TOTAL LOT SIZE	31,498 S.F. 0.72 ACRE
ZONE	C2 HIGHWAY BUSINESS
EXISTING USE	UNDEVELOPED
PROPOSED USE	AUTO PARTS STORE
PROPOSED BUILDING SIZE	1 BUILDING 6,750 S.F.
PROPOSED BUILDING HEIGHT	1 STORY 18'
PARKING REQUIRED (600 S.F. CUSTOMER SERVICE 1/200 = 3 SPACES) (2 PER 3 EMPLOYEES- 6 EMP. = 4 SPACES)	7 SPACES
PARKING PROPOSED (INCL. 1 HC.)	16 SPACES
IMPERVIOUS AREA	17,594 S.F. (0.40 ac.) 56.0 %
LANDSCAPE AREA	13,904 S.F. 44.0 %
DENUDED AREA	21,450 S.F. 0.49 AC.
CHATHAM COUNTY P.I.N.	9751-06-6500
OWNER	WALKER AUTO PARTS 705 SIX FORKS ROAD RALEIGH, N.C. 27609

DB 801, PG. 652
RECORDED PLAT – BM 2014, PG. 141

NOTES

1. BOUNDARY AND TOPOGRAPHIC INFORMATION TAKEN FROM SURVEY PREPARED BY NEWCOMB LAND SURVEYORS & DATED SEPT, 2014.
2. ALL CONSTRUCTION SHALL BE PERFORMED IN ACCORDANCE WITH THE CURRENT TOWN OF PITTSBORO STANDARDS, SPECIFICATIONS AND DETAILS.
3. CONTRACTOR SHALL SECURE ALL NECESSARY PERMITS FOR CONSTRUCTION SHOWN ON THESE PLANS.
4. ALL DIMENSIONS AND STAKING POINT LOCATIONS ARE TO BACK OF CURB UNLESS OTHERWISE NOTED.
5. ANY WORK SHOWN ON THESE PLANS THAT IS FOUND TO BE IN CONFLICT WITH THE TOWN OF PITTSBORO ZONING AND SETBACK REQUIREMENTS SHALL BE IMMEDIATELY REPORTED TO THE LANDSCAPE ARCHITECT FOR ADJUSTMENT
6. LOCATIONS FOR EXISTING UTILITIES SHOWN ON THESE PLANS ARE APPROXIMATE. CONTRACTOR SHALL VERIFY THE LOCATIONS OF ALL UTILITIES AND SHALL BE RESPONSIBLE FOR ANY DAMAGE TO SAME.
7. CONTRACTOR SHALL AT ALL TIMES MAINTAIN ADEQUATE SAFETY MEASURES, ACTIVITIES, AND BARRICADES FOR THE PROTECTION OF ALL PERSONS ON OR ABOUT THE LOCATION OF THE SITE.
8. CONTRACTOR SHALL PAINT SYMBOLS, INSTALL SIGNS AND CONSTRUCT NECESSARY RAMPS, AS PER THE NORTH CAROLINA STATE BUILDING CODE, FOR ALL HANDICAP PARKING SPACES AS NOTED ON PLAN.
9. CONTRACTOR SHALL DELINEATE PARKING SPACE LINES, HANDICAP SYMBOLS, DIRECTIONAL ARROWS, LANE MARKINGS, "STOP" MESSAGES, ETC., AS SHOWN ON THE PLANS ACCORDING TO NCDOT PAVEMENT MARKING SPECIFICATIONS. ARROW MARKINGS ARE TO BE PLACED IN THE CENTER OF EACH LANE AND SPACED A MINIMUM 10' APART.
10. CALL NORTH CAROLINA ONE CALL CENTER @ 811 OR 1-800-632-4949 BEFORE DIGGING.
11. DENUDED AREA IS 0.49 ACRE.
12. THIS SITE IS NOT WITHIN A 100 YEAR FLOODWAY FRINGE AREA.
13. SITE MUST BE STABILIZED AND SEEDED PRIOR TO ISSUANCE OF CERTIFICATE OF OCCUPANCY.
14. SEWER CAPACITY IS 150 GPD, THIS IS BASED ON 25 GPD PER PERSON WITH 6 EMPLOYEES.
15. ANY SIGNAGE FOR THIS SITE SHALL BE PERMITTED SEPARATELY.
16. NO SITE POLE LIGHTING IS PROPOSED.
17. NO TRASH COLLECTION IS REQUIRED FOR THIS BUILDING. THE OWNERS WILL COLLECT THE TRASH IN THEIR VANS AND TRANSPORT TO THEIR MAIN WAREHOUSE IN RALEIGH.

CONSTRUCTION NOTES

PRIOR TO CONSTRUCTION, THE OWNER WILL HAVE A GEOTECHNICAL ENGINEER PREPARE A REPORT OF SUBSURFACE INVESTIGATION AND GEOTECHNICAL ENGINEERING EVALUATION. THE GEOTECHNICAL ENGINEER WILL PROVIDE HIS PROFESSIONAL RECOMMENDATION FOR THE COMPACTION OF THE SOILS AND PROPOSED PAVING SPECIFICATIONS.

EXIST. CURB & GUTTER
EAST STREET U. S. HIGHWAY 64
150' PUBLIC R/W
EXIST. CURB & GUTTER
EXIST. CONC. SIDEWALK
SIDEWALK
150.00'
43.50'
EX. CURB INLET
TOP: 380.07'
INV.IN: 374.42'
INV.OUT: 374.32'
18"RCP INV.: 372.99'
18"RCP INV.: 374.31'
EXIST. FIRE HYDRANT
80.01'
S 84°01'30" E 185.88'
30.05'
5.00'
R5.00'
9.00'
9.00'
HC VAN
PROPOSED HC PARKING SPACE W/R7-8a SIGN & RAMP
25.00'
29.00'
60.00'
29.32'
DR. MARTIN LUTHER KING DR.
N.C.S.R. 1965
60' PUBLIC R/W
EXIST. CURB & GUTTER
EDGE OF EXIST. PAVEMENT
N 05°19'34" E 153.08'
24.00'
19.00'
PAVING
8" ABC, 2" SF9.5A
7.00'
PROPOSED
6,750 S.F.
75' x 90'
ONE STORY
AUTO PARTS
75.00'
90.00'
HVAC UNITS
10 SPACES
ALL PARKING SPACES
9' WIDE
7' CONC. SIDEWALK
W/TURNED DOWN CURB
7.00'
R17.79'
R10.00'
"STOP" SIGN
SIGN PER MUTCD
SPECIFICATIONS
"EXIT ONLY
DO NOT ENTER"
SIGN PER MUTCD
SPECIFICATIONS
RIGHT-OUT
ONLY
STOP BAR
40.85'
9.00'
TYP.
EDGE OF EXIST. PAVEMENT
R14.57
R5.00'
R10.00'
R4.00'
6 SPACES
19.00'
LOADING
23.49'
S 09°28'51" W 176.84'
EDGE OF EXIST. PAVEMENT
EXISTING 6" WATER LINE
L1
R15.40'
PAVING
8" ABC, 2" SF9.5A
24.00'
R5.00'
R5.50'
3' HT. SEG. BLOCK
RETAINING WALL
KEYSTONE OR EQUAL
11.51'
61.43'
R5.50'
N 83°47'49" W 163.00'
EDGE OF EXIST. PAVEMENT
STOP BAR
REMOVE EXIST.
DRIVEWAY STUB
EXIST. 4" SANITARY SEWER SERVICE
EXIST. PUBLIC UTILITY EASEMENT
EXIST. WATER LINE
EXIST. PUBLIC 8" SAN. SEWER LINE
GLADYS SEARS, MARCIA S. REGAN
& JOHN R. SEARS, TRUSTEES
DEED BOOK 801, PAGE 652
GLADYS SEARS, MARCIA S. REGAN
& JOHN R. SEARS, TRUSTEES
DEED BOOK 801, PAGE 652

BLAKELY DESIGN GROUP
Landscape Architecture Site Planning
700 Exposition Place, Suite 105, Raleigh, North Carolina 27615
Telephone (919) 870-1868 Fax (919) 870-0752
E-Mail taylor@blakelydesign.net

SITE PLAN

WALKER AUTO PARTS

630 EAST STREET, U.S. HIGHWAY 64 BUSINESS, PITTSBORO, N.C.

DATE	OCT.28, 14
SCALE	1"=20'
DRAWN	BTB
JOB NO.	

REVISIONS
11-20-14 BTB REVISED PER CHATHAM CO. & TOWN OF PITTSBORO STAFF COMMENTS
12-24-14 BTB REVISED PER TOWN OF PITTSBORO STAFF COMMENTS

SHEET
C1.0

C:\Documents and Settings\Taylor Blakely\My Documents\VIRENA ARCHITECTURE\Walker Auto Pittsboro\WALKER-AUTO-PITTSBORO-SITE-PLANS-10-28-14.dwg, SITE PLAN C1.0, 12/24/2014 9:17:02 AM, 1:1

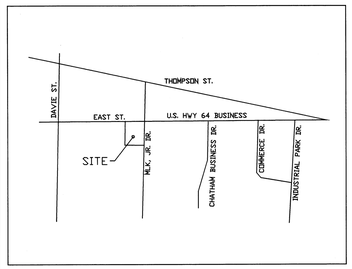

VICINITY MAP

SCALE: 1" = 20'
NC GRID, NAD83

0 20 40 60
graphic scale

LEGEND and NOMENCLATURE

SYMBOLS

- Ex. iron pipe/rod or nail
- Ex. concrete monument
- New iron pipe
- Calculated point
- Cable pedestal
- Telephone pedestal
- Electric pedestal
- Fiber-optic marker
- Traffic signal box
- Water meter
- Fire hydrant
- Valve (water or gas)
- Sanitary sewer manhole
- Sanitary sewer cleanout
- Storm curb inlet
- Drainage inlet (w/ grate)
- Storm drain manhole
- Utility pole
- Lamp post
- Signal pole
- Guy wire
- Sign post

LINETYPES

- Fence
- OU — Overhead utility
- W — Water
- SS — Sanitary sewer
- SD — Storm drain

ABBREVIATIONS

DB	Deed Book
PB or BM	Plat Book / Book of Maps
N/F	Now or formerly
Pg.	Page
SF	Square feet
Ac.	Acres
R/W	Right-of-way
NCSR	North Carolina State Route
NCDOT	North Carolina Dept. of Transportation
R/W	Right-of-way
Ex.	Existing
RCP	Reinforced concrete pipe
PVC	Polyvinyl chloride pipe
(M)	Measured
(P)	Platted
(D)	Deed

LINE TABLE

LINE	LENGTH	BEARING
L1	25.02	N 18°24'56" W

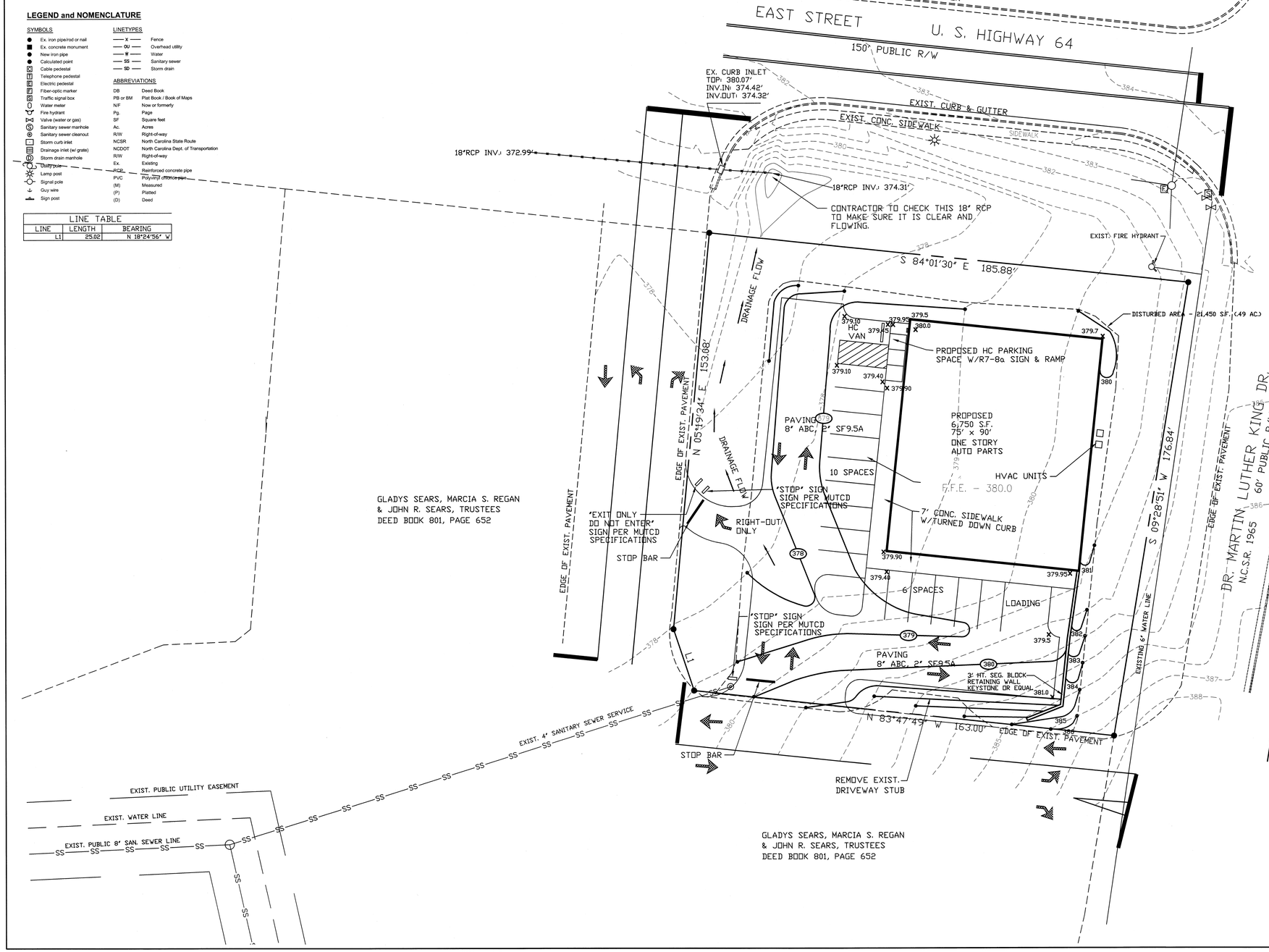

SITE DATA

TOTAL LOT SIZE	31,498 S.F. 0.72 ACRE
ZONE	C2 HIGHWAY BUSINESS
EXISTING USE	UNDEVELOPED
PROPOSED USE	AUTO PARTS STORE
PROPOSED BUILDING SIZE	1 BUILDING 6,750 S.F.
PROPOSED BUILDING HEIGHT	1 STORY 18'
PARKING REQUIRED (600 S.F. CUSTOMER SERVICE 1/200 = 3 SPACES) (2 PER 3 EMPLOYEES= 6 EMP. = 4 SPACES)	7 SPACES
PARKING PROPOSED (INCL. 1 HC.)	16 SPACES
IMPERVIOUS AREA	17,594 S.F. (0.40 ac.) 56.0 %
LANDSCAPE AREA	13,904 S.F. 44.0 %
DENUDED AREA	21,450 S.F. 0.49 AC.
CHATHAM COUNTY P.I.N.	9751-06-6500
OWNER	WALKER AUTO PARTS 705 SIX FORKS ROAD RALEIGH, N.C. 27609

DB 801, PG. 652
RECORDED PLAT – BM 2014, PG. 141

NOTES

1. BOUNDARY AND TOPOGRAPHIC INFORMATION TAKEN FROM SURVEY PREPARED BY NEWCOMB LAND SURVEYORS & DATED SEPT, 2014.
2. ALL CONSTRUCTION SHALL BE PERFORMED IN ACCORDANCE WITH THE CURRENT TOWN OF PITTSBORO STANDARDS, SPECIFICATIONS AND DETAILS.
3. CONTRACTOR SHALL SECURE ALL NECESSARY PERMITS FOR CONSTRUCTION SHOWN ON THESE PLANS.
4. ALL DIMENSIONS AND STAKING POINT LOCATIONS ARE TO BACK OF CURB UNLESS OTHERWISE NOTED.
5. ANY WORK SHOWN ON THESE PLANS THAT IS FOUND TO BE IN CONFLICT WITH THE TOWN OF PITTSBORO ZONING AND SETBACK REQUIREMENTS SHALL BE IMMEDIATELY REPORTED TO THE LANDSCAPE ARCHITECT FOR ADJUSTMENT
6. LOCATIONS FOR EXISTING UTILITIES SHOWN ON THESE PLANS ARE APPROXIMATE. CONTRACTOR SHALL VERIFY THE LOCATIONS OF ALL UTILITIES AND SHALL BE RESPONSIBLE FOR ANY DAMAGE TO SAME.
7. CONTRACTOR SHALL AT ALL TIMES MAINTAIN ADEQUATE SAFETY MEASURES, ACTIVITIES, AND BARRICADES FOR THE PROTECTION OF ALL PERSONS ON OR ABOUT THE LOCATION OF THE SITE.
8. CONTRACTOR SHALL PAINT SYMBOLS, INSTALL SIGNS AND CONSTRUCT NECESSARY RAMPS, AS PER THE NORTH CAROLINA STATE BUILDING CODE, FOR ALL HANDICAP PARKING SPACES AS NOTED ON PLAN.
9. CONTRACTOR SHALL DELINEATE PARKING SPACE LINES, HANDICAP SYMBOLS, DIRECTIONAL ARROWS, LANE MARKINGS, "STOP" MESSAGES, ETC., AS SHOWN ON THE PLANS ACCORDING TO NCDOT PAVEMENT MARKING SPECIFICATIONS. ARROW MARKINGS ARE TO BE PLACED IN THE CENTER OF EACH LANE AND SPACED A MINIMUM 10' APART.
10. CALL NORTH CAROLINA ONE CALL CENTER @ 811 OR 1-800-632-4949 BEFORE DIGGING.
11. DENUDED AREA IS 0.49 ACRE.
12. THIS SITE IS NOT WITHIN A 100 YEAR FLOODWAY FRINGE AREA.
13. SITE MUST BE STABILIZED AND SEEDED PRIOR TO ISSUANCE OF CERTIFICATE OF OCCUPANCY.
14. SEWER CAPACITY IS 150 GPD. THIS IS BASED ON 25 GPD PER PERSON WITH 6 EMPLOYEES.
15. ANY SIGNAGE FOR THIS SITE SHALL BE PERMITTED SEPARATELY.
16. NO SITE POLE LIGHTING IS PROPOSED.
17. NO TRASH COLLECTION IS REQUIRED FOR THIS BUILDING. THE OWNERS WILL COLLECT THE TRASH IN THEIR VANS AND TRANSPORT TO THEIR MAIN WAREHOUSE IN RALEIGH.

CONSTRUCTION NOTES

PRIOR TO CONSTRUCTION, THE OWNER WILL HAVE A GEOTECHNICAL ENGINEER PREPARE A REPORT OF SUBSURFACE INVESTIGATION AND GEOTECHNICAL ENGINEERING EVALUATION. THE GEOTECHNICAL ENGINEER WILL PROVIDE HIS PROFESSIONAL RECOMMENDATION FOR THE COMPACTION OF THE SOILS AND PROPOSED PAVING SPECIFICATIONS.

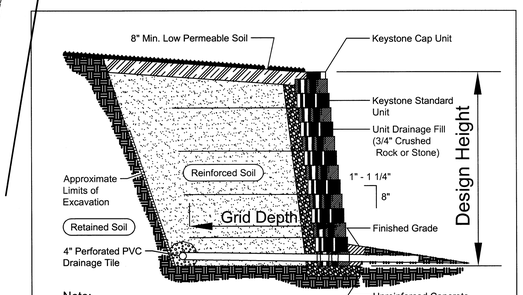

Note:
When site conditions require, wrap drainage tile in 3/4" aggregate and filter fabric with drainage composite or aggregate back drain system, as directed by geotechnical engineer.

SEGMENTED BLOCK RETAINING WALL BY "KEYSTONE", "ROCKWOOD" OR EQUAL

Typical Reinforced Wall Section
Standard Unit - 1" Setback

BLAKELY DESIGN GROUP
Landscape Architecture Site Planning
700 Exposition Place, Suite 105, Raleigh, North Carolina 27615
Telephone (919) 870-1868 Fax (919) 870-0752
E-Mail - taylor@blakelydesign.net

GRADING PLAN

WALKER AUTO PARTS
630 EAST STREET, U.S. HIGHWAY 64 BUSINESS, PITTSBORO, N.C.

DATE OCT.28, 14
SCALE 1"=20'
DRAWN BTB
JOB NO.

REVISIONS
11-30-14 BTB REVISED PER CHATHAM CO. & TOWN OF PITTSBORO STAFF COMMENTS
12-24-14 BTB REVISED PER TOWN OF PITTSBORO STAFF COMMENTS

SHEET
C2.0

C:\Documents and Settings\Taylor Blakely\My Documents\URENA ARCHITECTURE\Walker Auto Pittsboro\WALKER-AUTO-PITTSBORO-SITE-PLANS-10-28-14.dwg, GRADING PLAN C2.0, 12/24/2014 9:17:26 AM, 1:1

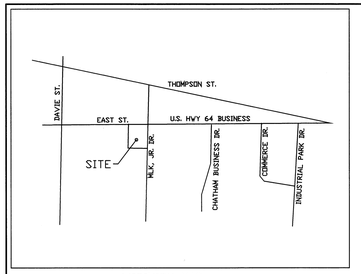

VICINITY MAP

LEGEND and NOMENCLATURE

SYMBOLS

- Ex. iron pipe/rod or nail
- Ex. concrete monument
- New iron pipe
- Calculated point
- Cable pedestal
- Telephone pedestal
- Electric pedestal
- Fiber-optic marker
- Traffic signal box
- Water meter
- Fire hydrant
- Valve (water or gas)
- Sanitary sewer manhole
- Sanitary sewer cleanout
- Storm curb inlet
- Drainage inlet (w/ grate)
- Storm drain manhole
- Utility pole
- Lamp post
- Signal pole
- Guy wire
- Sign post

LINETYPES

- —x— Fence
- —OU— Overhead utility
- —W— Water
- —SS— Sanitary sewer
- —SD— Storm drain

ABBREVIATIONS

DB	Deed Book
PB or BM	Plat Book / Book of Maps
N/F	Now or formerly
Pg.	Page
SF	Square feet
Ac.	Acres
R/W	Right-of-way
NCSR	North Carolina State Route
NCDOT	North Carolina Dept. of Transportation
R/W	Right-of-way
Ex.	Existing
RCP	Reinforced concrete pipe
PVC	Polyvinyl chloride pipe
(M)	Measured
(P)	Platted
(D)	Deed

LINE TABLE

LINE	LENGTH	BEARING
L1	25.02	N 18°24'56" W

SCALE: 1" = 20'
NC GRID, NAD83

0 20 40 60
graphic scale

- PRUNE LOWER BRANCHES OF TREE BACK TO MAIN TRUNK SO THAT REMAINING HEAD IS APPROX. 1/2 OF TOTAL TREE HEIGHT
- PLANT SO THAT TOP OF ROOT BALL IS EVEN WITH THE FINISHED GRADE
- PAINT ALL CUTS OVER 1" DIA.
- FLAG GUYING WIRES WITH SURVEYOR TAPE

SPREAD
OVERALL HT.
BACKFILL CA. TRUNK HT.
RUBBER HOSE 1" DIA.
GUYING WIRES 2 STRAND TWIST 12 GAUGE WIRE OR 1/4" NYLON CORD
3" MIN. PINE STRAW MULCH CLEAR OF TRUNK
3" FORM SAUCER
3 2"X4"X24" PRESS TREATED STAKES - TOP OF STAKE 6" ABOVE GROUND
PLANTING MIX - 1 PART TOPSOIL TO 3 PARTS EXISTING SOIL WATER & TAMP TO REMOVE AIR POCKETS
ALLOW THIN LAYER OF SOIL TO COVER BALL
UNTIE STRING & PEAL BACK BURLAP FROM BALL
2 X BALL DIA.

NOTE:
STAKING AS REQUIRED

TREE PLANTING – GUY WIRES
SCALE: NOT TO SCALE

PLANTING NOTES & SPECIFICATIONS

1. ALL TREES AND SHRUBS HAVE BEEN LOCATED WITH RESPECT TO PROPOSED OR EXISTING FACILITIES.
2. VERIFICATION OF TOTAL QUANTITIES AS SHOWN IN THE PLANT LIST SHALL BE THE RESPONSIBILITY OF THE LANDSCAPE CONTRACTOR.
3. ALL TREES, SHRUBS AND OTHER PLANTS SHALL CONFORM TO ACCEPTED STANDARDS ESTABLISHED BY THE AMERICAN ASSOCIATION OF NURSERYMEN.
4. ALL SAUCERS SHALL BE SOAKED WITH WATER AND MULCHED IMMEDIATELY FOLLOWING PLANTING.
5. PRUNING - THIN BRANCHES AND FOLIAGE OF DECIDUOUS TREES OUT ALL TWO-WAY BY 1/3, RETAINING NATURAL PLANT SHAPE. NEVER CUT A LEADER.
6. ALL PLANTS SHALL BEAR THE SAME RELATIONSHIP TO FINISHED GRADE AS IT BORE TO PREVIOUS EXISTING GRADE. PLANT ALL AZALEAS AND RHODODENDRON WITH 1/3 OF ROOT BALL ABOVE GRADE.
7. ALL ROOT BALLS REMOVED FROM CONTAINERS SHALL BE SCARIFIED PRIOR TO BACKFILLING.
8. MULCH ALL DISTURBED AREAS AND PLANT BEDS WITH 3" OF CLEAN PINE NEEDLES.
9. ALL ABOVE GROUND UTILITY DEVICES TO BE SCREENED WITH NEEDLEPOINT HOLLIES OR EQUAL EVERGREEN BY THE LANDSCAPE CONTRACTOR.

PLANT LIST

SYMBOL	BOTANICAL NAME	COMMON NAME	SIZE	QUANTITY	REMARKS
RM	ACER RUBRUM "OCTOBER GLORY"	OCTOBER GLORY RED MAPLE	2" CAL.	6	8' MIN. HT. B. & B.
CM	LAGERSTROEMIA INDICA "TUSCARORA"	TUSCARORA CRAPE MYRTLE	6' HT.	11	6' MIN. HT. B. & B.
CE	ULMUS PARVIFOLIA	CHINESE ELM	2" CAL.	7	8' MIN. HT. B. & B.
RB	CERCIS CANADENSIS	EASTERN REDBUD	6' HT.	4	6' MIN. HT. B. & B.
SYCAMORE	PLATANUS OCCIDENTALIS	AMERICAN SYCAMORE	6" CAL.	2	6" CAL. B. & B.

LANDSCAPE CALCULATIONS

STREET YARD	EAST STREET	185.88 L.F.
LARGE TREES REQUIRED (4/100 L.F.)	= 8 - 2" CAL. TREES	
LARGE TREES EXISTING	0 TREES	
LARGE TREES PROPOSED	8 - 2" CAL. TREES	
SMALL TREES REQUIRED (4/100 L.F.)	= 8 - 6' HT. TREES	
SMALL TREES EXISTING	0 TREES	
SMALL TREES PROPOSED	= 8 - 6' HT. TREES	
STREET YARD	DR. MLK, JR. RD.	176.84 L.F.
LARGE TREES REQUIRED (4/100 L.F.)	= 7 - 2" CAL. TREES	
LARGE TREES EXISTING	3 TREES	
LARGE TREES PROPOSED	4 - 2" CAL. TREES	
SMALL TREES REQUIRED (4/100 L.F.)	= 7 - 6' HT. TREES	
SMALL TREES EXISTING	0 TREES	
SMALL TREES PROPOSED	= 7 - 6' HT. TREES	
VEHICULAR SURFACE AREA		
LARGE TREES REQUIRED (1 / PK. SP.x 16 PK. SP.)	2 TREES	
LARGE TREES EXISTING	3 TREES	
LARGE TREES PROPOSED	1 TREE	
SMALL TREES REQUIRED (.125 /PK. SP.x 16 PK. SP.)	2 TREES	
SMALL TREES EXISTING	3 TREES	
SMALL TREES PROPOSED	0 TREE	

EXIST. CURB & GUTTER
EAST STREET
U. S. HIGHWAY 64
150' PUBLIC R/W
EXIST. CURB & GUTTER
EXIST. CONC. SIDEWALK
SIDEWALK
EX. CURB INLET
TOP: 380.07'
INV.IN: 374.42'
INV.OUT: 374.32'
18"RCP INV.: 372.99'
18"RCP INV.: 374.31'
EXIST. JUNIPERS 3'-4' HT.
EXIST. FIRE HYDRANT
RM-2
CE-2
CM-2
CM-4
S 84°01'30" E 185.88'
DEAD 6" CAL. SYCAMORE REPLACE W/6" CAL SYCAMORE
12 EX. LORDPETALUM
DEAD 6" CAL. SYCAMORE REPLACE W/6" CAL SYCAMORE
HC VAN
PROPOSED HC PARKING SPACE W/R7-8a SIGN & RAMP
PROPOSED 6,750 S.F. 75' x 90' ONE STORY AUTO PARTS
HVAC UNITS
3 EXIST. 6" CAL. SYCAMORES
EXIST. JUNIPERS 3'-4' HT.
CE
CM-3
RB
RB-3
RM-2
EDGE OF EXIST. PAVEMENT
S 09°48'34" W 176.84
EXISTING 6" WATER LINE
DR. MARTIN LUTHER KING DR.
N.C.S.R. 1965
60' PUBLIC R/W
EXIST. CURB & GUTTER
3 EXIST. CRAPEMYRTLES 8'-10' HT.
8 EXIST. DWARF YAUPON HOLLY
PAVING 8" ABC, 2" SF9.5A
10 SPACES
'STOP' SIGN SIGN PER MUTCD SPECIFICATIONS
'EXIT ONLY DO NOT ENTER' SIGN PER MUTCD SPECIFICATIONS
RIGHT-OUT ONLY
STOP BAR
7' CONC. SIDEWALK W/TURNED DOWN CURB
6 SPACES
LOADING
8 EX. LORDPETALUM
EX. 5" CAL. SYCAMORE
'STOP' SIGN SIGN PER MUTCD SPECIFICATIONS
PAVING 8" ABC, 2" SF9.5A
3' HT. SEG. BLOCK RETAINING WALL KEYSTONE OR EQUAL
N 83°47'49" W 163.00'
EDGE OF EXIST. PAVEMENT
EX. 5" CAL. SYCAMORE
STOP BAR
EX. 5" CAL. SYCAMORE (REMOVE)
REMOVE EXIST. DRIVEWAY STUB
EX. 6" CAL. SYCAMORE
EXIST. 4" SANITARY SEWER SERVICE
EXIST. PUBLIC UTILITY EASEMENT
EXIST. WATER LINE
EXIST. PUBLIC 8" SAN. SEWER LINE
GLADYS SEARS, MARCIA S. REGAN & JOHN R. SEARS, TRUSTEES DEED BOOK 801, PAGE 652
GLADYS SEARS, MARCIA S. REGAN & JOHN R. SEARS, TRUSTEES DEED BOOK 801, PAGE 652

BLAKELY DESIGN GROUP
Landscape Architecture Site Planning
700 Exposition Place, Suite 105, Raleigh, North Carolina 27615
Telephone (919) 870-1868 Fax (919) 870-0752
E-Mail - taylor@blakelydesign.net

LANDSCAPE PLAN

WALKER AUTO PARTS

U.S. HIGHWAY 64, PITTSBORO, N.C.

DATE OCT.2, 14
SCALE 1"=20'
DRAWN BTB
JOB NO.

REVISIONS
11-20-14 BTB REVISED PER CHATHAM CO. & TOWN OF PITTSBORO STAFF COMMENTS
12-24-14 BTB REVISED PER TOWN OF PITTSBORO STAFF COMMENTS

SHEET
C3.0

C:\Documents and Settings\Taylor Blakely\My Documents\URENA ARCHITECTURE\Walker Auto Pittsboro\WALKER-AUTO-PITTSBORO-SITE-PLANS-10-28-14.dwg, LANDSCAPE PLAN C3.0, 12/24/2014 9:17:44 AM, 1:1

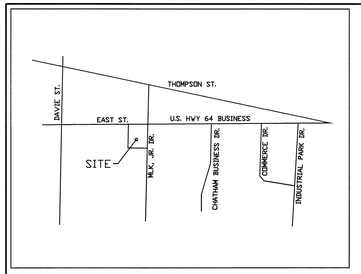

VICINITY MAP

SCALE: 1" = 20'
NC GRID, NAD83

0 20 40 60
graphic scale

LEGEND and NOMENCLATURE

SYMBOLS

- Ex. iron pipe/rod or nail
- Ex. concrete monument
- New iron pipe
- Calculated point
- Cable pedestal
- Telephone pedestal
- Electric pedestal
- Fiber-optic marker
- Traffic signal box
- Water meter
- Fire hydrant
- Valve (water or gas)
- Sanitary sewer manhole
- Sanitary sewer cleanout
- Storm curb inlet
- Drainage inlet (w/ grate)
- Storm drain manhole
- Utility pole
- Lamp post
- Signal pole
- Guy wire
- Sign post

LINETYPES

- —x— Fence
- —OU— Overhead utility
- —W— Water
- —SS— Sanitary sewer
- —SD— Storm drain

ABBREVIATIONS

DB	Deed Book
PB or BM	Plat Book / Book of Maps
N/F	Now or formerly
Pg.	Page
SF	Square feet
Ac.	Acres
R/W	Right-of-way
NCSR	North Carolina State Route
NCDOT	North Carolina Dept. of Transportation
R/W	Right-of-way
Ex.	Existing
RCP	Reinforced concrete pipe
PVC	Polyvinyl chloride pipe
(M)	Measured
(P)	Platted
(D)	Deed

LINE TABLE

LINE	LENGTH	BEARING
L1	25.02	N 18°24'56" W

NOTES

1. BOUNDARY AND TOPOGRAPHIC INFORMATION TAKEN FROM SURVEY PREPARED BY NEWCOMB LAND SURVEYORS & DATED SEPT, 2014.
2. ALL CONSTRUCTION SHALL BE PERFORMED IN ACCORDANCE WITH THE CURRENT TOWN OF PITTSBORO STANDARDS, SPECIFICATIONS AND DETAILS.
3. CONTRACTOR SHALL SECURE ALL NECESSARY PERMITS FOR CONSTRUCTION SHOWN ON THESE PLANS.
4. ALL DIMENSIONS AND STAKING POINT LOCATIONS ARE TO BACK OF CURB UNLESS OTHERWISE NOTED.
5. ANY WORK SHOWN ON THESE PLANS THAT IS FOUND TO BE IN CONFLICT WITH THE TOWN OF PITTSBORO ZONING AND SETBACK REQUIREMENTS SHALL BE IMMEDIATELY REPORTED TO THE LANDSCAPE ARCHITECT FOR ADJUSTMENT
6. LOCATIONS FOR EXISTING UTILITIES SHOWN ON THESE PLANS ARE APPROXIMATE. CONTRACTOR SHALL VERIFY THE LOCATIONS OF ALL UTILITIES AND SHALL BE RESPONSIBLE FOR ANY DAMAGE TO SAME.
7. CONTRACTOR SHALL AT ALL TIMES MAINTAIN ADEQUATE SAFETY MEASURES, ACTIVITIES, AND BARRICADES FOR THE PROTECTION OF ALL PERSONS ON OR ABOUT THE LOCATION OF THE SITE.
8. CONTRACTOR SHALL PAINT SYMBOLS, INSTALL SIGNS AND CONSTRUCT NECESSARY RAMPS, AS PER THE NORTH CAROLINA STATE BUILDING CODE, FOR ALL HANDICAP PARKING SPACES AS NOTED ON PLAN.
9. CONTRACTOR SHALL DELINEATE PARKING SPACE LINES, HANDICAP SYMBOLS, DIRECTIONAL ARROWS, LANE MARKINGS, "STOP" BE SIGNS, ETC. AS SHOWN ON THE PLANS ACCORDING TO NCDOT PAVEMENT MARKING SPECIFICATIONS. ARROW MARKINGS ARE TO BE PLACED IN THE CENTER OF EACH LANE AND SPACED A MINIMUM 10' APART.
10. CALL NORTH CAROLINA ONE CALL CENTER @ 811 OR 1-800-632-4949 BEFORE DIGGING.
11. DENUDED AREA IS 0.49 ACRE.
12. THIS SITE IS NOT WITHIN A 100 YEAR FLOODWAY FRINGE AREA.
13. SITE MUST BE STABILIZED AND SEEDED PRIOR TO ISSUANCE OF CERTIFICATE OF OCCUPANCY.
14. SEWER CAPACITY IS 150 GPD, THIS IS BASED ON 25 GPD PER PERSON WITH 6 EMPLOYEES.
15. ANY SIGNAGE FOR THIS SITE SHALL BE PERMITTED SEPARATELY.
16. NO SITE POLE LIGHTING IS PROPOSED.
17. NO TRASH COLLECTION IS REQUIRED FOR THIS BUILDING. THE OWNERS WILL COLLECT THE TRASH IN THEIR VANS AND TRANSPORT TO THEIR MAIN WAREHOUSE IN RALEIGH.

CONSTRUCTION NOTES

PRIOR TO CONSTRUCTION, THE OWNER WILL HAVE A GEOTECHNICAL ENGINEER PREPARE A REPORT OF SUBSURFACE INVESTIGATION AND GEOTECHNICAL ENGINEERING EVALUATION. THE GEOTECHNICAL ENGINEER WILL PROVIDE HIS PROFESSIONAL RECOMMENDATION FOR THE COMPACTION OF THE SOILS AND PROPOSED PAVING SPECIFICATIONS.

EXIST. CURB & GUTTER
EAST STREET U. S. HIGHWAY 64
150' PUBLIC R/W
EXIST. CURB & GUTTER
EXIST. CONC. SIDEWALK
SIDEWALK
EX. CURB INLET
TOP: 380.07'
INV.IN: 374.42'
INV.OUT: 374.32'
18"RCP INV.: 372.99'
18"RCP INV.: 374.31'
EXIST. FIRE HYDRANT
S 84°01'30" E 185.88'
HC VAN
PROPOSED HC PARKING SPACE W/R7-8a SIGN & RAMP
PROPOSED 6,750 S.F. 75' x 90' ONE STORY AUTO PARTS
HVAC UNITS
PAVING 8" ABC, 2" SF9.5A
10 SPACES
N 05°19'34" E 153.08'
EDGE OF EXIST. PAVEMENT
"STOP" SIGN SIGN PER MUTCD SPECIFICATIONS
"EXIT ONLY DO NOT ENTER" SIGN PER MUTCD SPECIFICATIONS
RIGHT-OUT ONLY
STOP BAR
PROPOSED 3/4" COPPER DOMESTIC WATER LINE
7' CONC. SIDEWALK W/TURNED DOWN CURB
S 09°28'51" W 176.84'
EDGE OF EXIST. PAVEMENT
DR. MARTIN LUTHER KING DR. N.C.S.R. 1965 60' PUBLIC R/W
EXIST. CURB & GUTTER
C.O.
C.O.
6 SPACES
LOADING
"STOP" SIGN SIGN PER MUTCD SPECIFICATIONS
PAVING 8" ABC, 2" SF9.5A
3' HT. SEG. BLOCK RETAINING WALL KEYSTONE OR EQUAL
EXISTING 6" WATER LINE
PROPOSED 3/4" WATER TAP WITH 6' x 3/4" TS & GV ASSEMBLY BY LICENSED UTILITY CONTRACTOR
PROVIDE CURB STOP WV PRIOR TO EACH METER
PROPOSED 3/4" WATER METER W/RPZ BACKFLOW DEVICE (WATTS 909M1) MOUNTED IN ABOVE GROUND "HOT BOX". PROVIDE GATE VALVE BEFORE BACKFLOW DEVICE
N 83°47'49" W 163.00'
EDGE OF EXIST. PAVEMENT
STOP BAR
PROPOSED 4" PVC SANITARY SEWER SERVICE W/C.O. EVERY 50', MIN. 2% SLOPE
REMOVE EXIST. DRIVEWAY STUB
EXIST. 4" SANITARY SEWER SERVICE
L1

CONTRACTOR TO CONFIRM THE EXISTING SANITARY SEWER SERVICE IS OPERATIONAL & IN GOOD CONDITION. PROVIDE INVERT-IN AND INVERT-OUT ELEVATIONS TO TOWN ENGINEER PRIOR TO CONSTRUCTION. IF THE EXISTING SEWER SERVICE IS NOT IN GOOD WORKING ORDER, THE CONTRACTOR SHALL REPLACE THE EXISTING SERVICE LINE TO TOWN STANDARDS.

EXIST. PUBLIC UTILITY EASEMENT
EXIST. WATER LINE
EXIST. PUBLIC 8" SAN. SEWER LINE

GLADYS SEARS, MARCIA S. REGAN & JOHN R. SEARS, TRUSTEES DEED BOOK 801, PAGE 652

GLADYS SEARS, MARCIA S. REGAN & JOHN R. SEARS, TRUSTEES DEED BOOK 801, PAGE 652

BLAKELY DESIGN GROUP
Landscape Architecture Site Planning
700 Exposition Place, Suite 105, Raleigh, North Carolina 27615
Telephone (919) 870-1668 Fax (919) 870-0752
E-Mail tayloratblakelydesign.net

UTILITY PLAN

WALKER AUTO PARTS

630 EAST STREET, U.S. HIGHWAY 64 BUSINESS, PITTSBORO, N.C.

DATE	OCT.28, 14
SCALE	1"=20'
DRAWN	BTB
JOB NO.	

REVISIONS
11-30-14 BTB REVISED PER CHATHAM CO. & TOWN OF PITTSBORO STAFF COMMENTS
12-24-14 BTB REVISED PER TOWN OF PITTSBORO STAFF COMMENTS

SHEET
C4.0

C:\Documents and Settings\Taylor Blakely\My Documents\LARENA ARCHITECTURE\Walker Auto Pittsboro\WALKER-AUTO-PITTSBORO-SITE-PLANS-10-28-14.dwg, UTILITY PLAN, C4.0, 12/24/2014 9:19:45 AM, 1:1

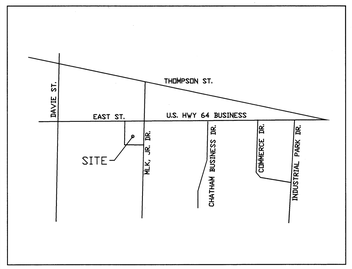

VICINITY MAP

SCALE: 1" = 20'
NC GRID, NAD83

0 20 40 60
graphic scale

LEGEND and NOMENCLATURE

SYMBOLS

- Ex. iron pipe/rod or nail
- Ex. concrete monument
- New iron pipe
- Calculated point
- Cable pedestal
- Telephone pedestal
- Electric pedestal
- Fiber-optic marker
- Traffic signal box
- Water meter
- Fire hydrant
- Valve (water or gas)
- Sanitary sewer manhole
- Sanitary sewer cleanout
- Storm curb inlet
- Drainage inlet (w/ grate)
- Storm drain manhole
- Utility pole
- Lamp post
- Signal pole
- Guy wire
- Sign post

LINETYPES

- Fence
- Overhead utility
- Water
- Sanitary sewer
- Storm drain

ABBREVIATIONS

DB	Deed Book
PB or BM	Plat Book / Book of Maps
N/F	Now or formerly
Pg.	Page
SF	Square feet
Ac.	Acres
R/W	Right-of-way
NCSR	North Carolina State Route
NCDOT	North Carolina Dept. of Transportation
R/W	Right-of-way
Ex.	Existing
RCP	Reinforced concrete pipe
PVC	Poly-Vinyl Chloride pipe
(M)	Measured
(P)	Platted
(D)	Deed

LINE TABLE

LINE	LENGTH	BEARING
L1	25.02	N 18°24'56" W

NOTES

1. BOUNDARY AND TOPOGRAPHIC INFORMATION TAKEN FROM SURVEY PREPARED BY NEWCOMB LAND SURVEYORS & DATED SEPT, 2014.
2. ALL CONSTRUCTION SHALL BE PERFORMED IN ACCORDANCE WITH THE CURRENT TOWN OF PITTSBORO STANDARDS, SPECIFICATIONS AND DETAILS.
3. CONTRACTOR SHALL SECURE ALL NECESSARY PERMITS FOR CONSTRUCTION SHOWN ON THESE PLANS.
4. ALL DIMENSIONS AND STAKING POINT LOCATIONS ARE TO BACK OF CURB UNLESS OTHERWISE NOTED.
5. ANY WORK SHOWN ON THESE PLANS THAT IS FOUND TO BE IN CONFLICT WITH THE TOWN OF PITTSBORO ZONING AND SETBACK REQUIREMENTS SHALL BE IMMEDIATELY REPORTED TO THE LANDSCAPE ARCHITECT FOR ADJUSTMENT
6. LOCATIONS FOR EXISTING UTILITIES SHOWN ON THESE PLANS ARE APPROXIMATE. CONTRACTOR SHALL VERIFY THE LOCATIONS OF ALL UTILITIES AND SHALL BE RESPONSIBLE FOR ANY DAMAGE TO SAME.
7. CONTRACTOR SHALL AT ALL TIMES MAINTAIN ADEQUATE SAFETY MEASURES, ACTIVITIES, AND BARRICADES FOR THE PROTECTION OF ALL PERSONS ON OR ABOUT THE LOCATION OF THE SITE.
8. CONTRACTOR SHALL PAINT SYMBOLS, INSTALL SIGNS AND CONSTRUCT NECESSARY RAMPS, AS PER THE NORTH CAROLINA STATE BUILDING CODE, FOR ALL HANDICAP PARKING SPACES AS NOTED ON PLAN.
9. CONTRACTOR SHALL DELINEATE PARKING SPACE LINES, HANDICAP SYMBOLS, DIRECTIONAL ARROWS, LANE MARKINGS, "STOP" MESSAGES, ETC. AS SHOWN ON THE PLANS ACCORDING TO NCDOT PAVEMENT MARKING SPECIFICATIONS. ARROW MARKINGS ARE TO BE PLACED IN THE CENTER OF EACH LANE AND SPACED A MINIMUM 10' APART.
10. CALL NORTH CAROLINA ONE CALL CENTER @ 811 OR 1-800-632-4949 BEFORE DIGGING.
11. DENUDED AREA IS 0.49 ACRE.
12. THIS SITE IS NOT WITHIN A 100 YEAR FLOODWAY FRINGE AREA.
13. SITE MUST BE STABILIZED AND SEEDED PRIOR TO ISSUANCE OF CERTIFICATE OF OCCUPANCY.
14. SEWER CAPACITY IS 150 GPD, THIS IS BASED ON 25 GPD PER PERSON WITH 6 EMPLOYEES.
15. ANY SIGNAGE FOR THIS SITE SHALL BE PERMITTED SEPARATELY.
16. NO SITE POLE LIGHTING IS PROPOSED.
17. NO TRASH COLLECTION IS REQUIRED FOR THIS BUILDING. THE OWNERS WILL COLLECT THE TRASH IN THEIR VANS AND TRANSPORT TO THEIR MAIN WAREHOUSE IN RALEIGH.

CONSTRUCTION NOTES

PRIOR TO CONSTRUCTION, THE OWNER WILL HAVE A GEOTECHNICAL ENGINEER PREPARE A REPORT OF SUBSURFACE INVESTIGATION AND GEOTECHNICAL ENGINEERING EVALUATION. THE GEOTECHNICAL ENGINEER WILL PROVIDE HIS PROFESSIONAL RECOMMENDATION FOR THE COMPACTION OF THE SOILS AND PROPOSED PAVING SPECIFICATIONS.

EROSION CONTROL LEGEND

- TEMPORARY SILT FENCE
- TEMPORARY CONSTRUCTION ENTRANCE
- TEMPORARY SILT FENCE OUTLET

EAST STREET
U. S. HIGHWAY 64
150' PUBLIC R/W
EXIST. CURB & GUTTER
EXIST. CURB & GUTTER
EXIST. CONC. SIDEWALK
SIDEWALK
EX. CURB INLET
TOP: 380.07'
INV.IN: 374.42'
INV.OUT: 374.32'
18"RCP INV.: 372.99'
18"RCP INV.: 374.31'
CONTRACTOR TO CHECK THIS 18" RCP TO MAKE SURE IT IS CLEAR AND FLOWING.
PROVIDE TEMPORARY SILT FENCE OUTLET
EXIST. FIRE HYDRANT
S 84°01'30" E 185.88'
DRAINAGE FLOW
DISTURBED AREA = 21,450 S.F. (.49 AC.)
PROPOSED HC PARKING SPACE W/R7-8a SIGN & RAMP
PROVIDE TEMPORARY SILT FENCE
HC VAN
PROPOSED 6,750 S.F. 75' x 90' ONE STORY AUTO PARTS
F.F.E. = 380.0
HVAC UNITS
10 SPACES
PAVING 8" ABC, 2" SF9.5A
7' CONC. SIDEWALK W/TURNED DOWN CURB
6 SPACES
LOADING
3' HT. SEG. BLOCK RETAINING WALL KEYSTONE OR EQUAL
PAVING 8" ABC, 2" SF9.5A
N 83°47'49" W 163.00'
EDGE OF EXIST. PAVEMENT
N 05°19'34" E 153.68'
EDGE OF EXIST. PAVEMENT
DRAINAGE FLOW
PROVIDE TEMPORARY SILT FENCE
EDGE OF EXIST. PAVEMENT
'EXIT ONLY' DO NOT ENTER' SIGN PER MUTCD SPECIFICATIONS
RIGHT-OUT ONLY
STOP BAR
'STOP' SIGN SIGN PER MUTCD SPECIFICATIONS
'STOP' SIGN SIGN PER MUTCD SPECIFICATIONS
STOP BAR
PROVIDE TEMPORARY GRAVEL CONSTRUCTION ENTRANCE 25' WIDE OR WIDTH OF DRIVEWAY, WHICHEVER IS GREATER x 50' x 6"
REMOVE EXIST. DRIVEWAY STUB
L1
S 09°28'51" W 176.84'
EXISTING 6" WATER LINE
DR. MARTIN LUTHER KING, JR. DR.
N.C.S.R. 1965
60' PUBLIC R/W
EDGE OF EXIST. PAVEMENT
EXIST. CURB & GUTTER
EXIST. 4" SANITARY SEWER SERVICE
EXIST. PUBLIC UTILITY EASEMENT
EXIST. WATER LINE
EXIST. PUBLIC 8" SAN. SEWER LINE
GLADYS SEARS, MARCIA S. REGAN & JOHN R. SEARS, TRUSTEES DEED BOOK 801, PAGE 652
GLADYS SEARS, MARCIA S. REGAN & JOHN R. SEARS, TRUSTEES DEED BOOK 801, PAGE 652

BLAKELY DESIGN GROUP
Landscape Architecture Site Planning
700 Exposition Place, Suite 105, Raleigh, North Carolina 27615
Telephone (919) 870-1868 Fax (919) 870-0752
E-Mail - taylor@blakeydesign.net

EROSION CONTROL PLAN

WALKER AUTO PARTS

630 EAST STREET, U.S. HIGHWAY 64 BUSINESS, PITTSBORO, N.C.

DATE OCT.28, 14
SCALE 1"=20'
DRAWN BTB
JOB NO.

REVISIONS
11-20-14 BTB REVISED PER 2ND TOWN OF PITTSBORO STAFF COMMENTS
12-24-14 BTB REVISED PER TOWN OF PITTSBORO STAFF COMMENTS

SHEET
C5.0

C:\Documents and Settings\Taylor Blakely\My Documents\URENA ARCHITECTURE\Walker Auto Pittsboro\WALKER-AUTO-PITTSBORO-SITE-PLANS-10-28-14.dwg, EROSION CONTROL PLAN C5.0, 12/24/2014 9:20:27 AM, 1:1

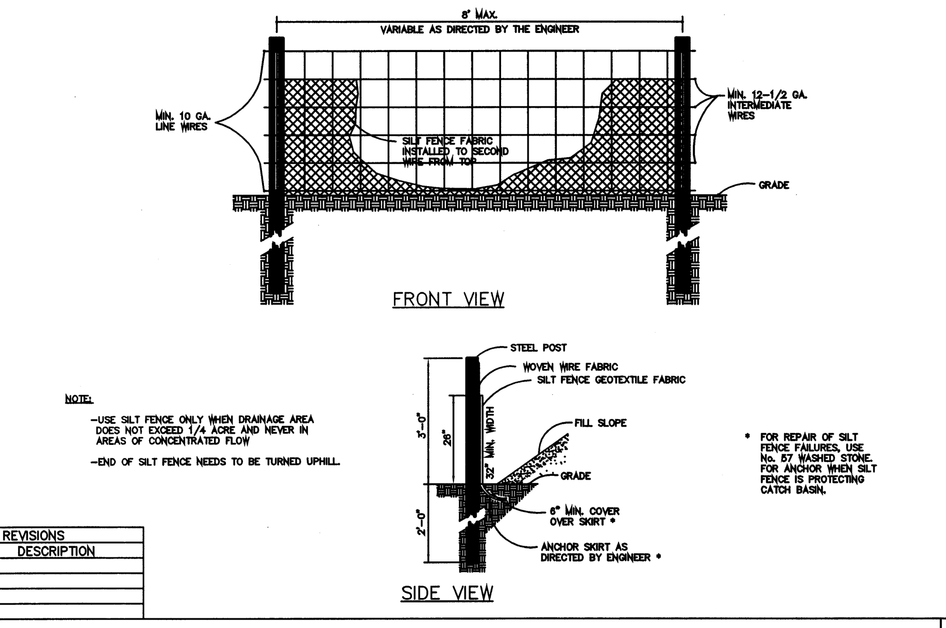

NOTE:

- USE SILT FENCE ONLY WHEN DRAINAGE AREA DOES NOT EXCEED 1/4 ACRE AND NEVER IN AREAS OF CONCENTRATED FLOW
- END OF SILT FENCE NEEDS TO BE TURNED UPHILL.

* FOR REPAIR OF SILT FENCE FAILURES, USE No. 57 WASHED STONE. FOR ANCHOR WHEN SILT FENCE IS PROTECTING CATCH BASIN.

REVISIONS	
DATE	DESCRIPTION

STANDARD TEMPORARY SILT FENCE | 1

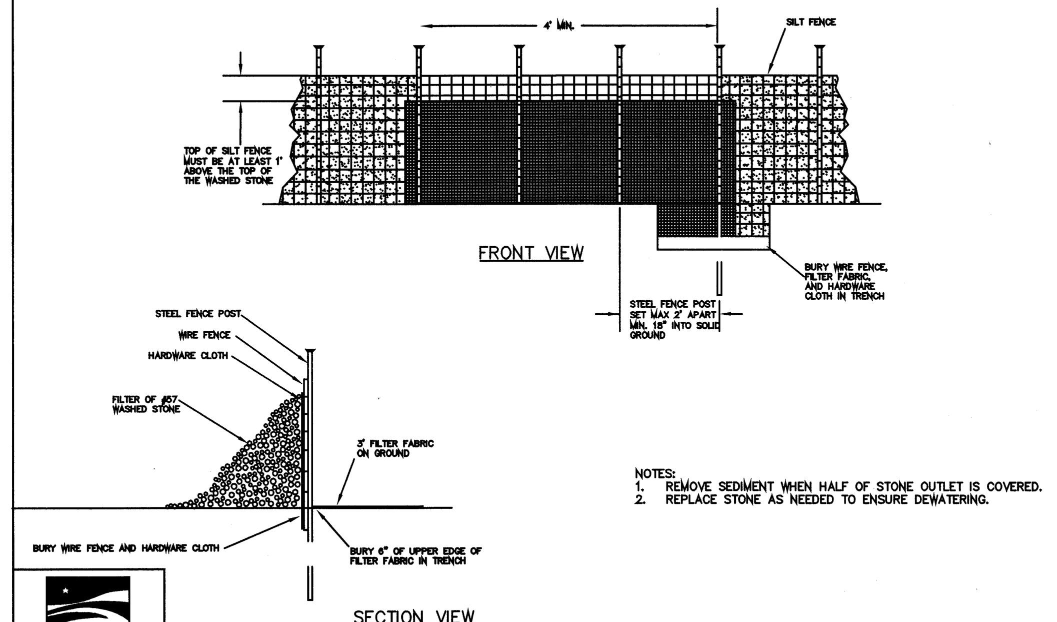

NOTES:
1. REMOVE SEDIMENT WHEN HALF OF STONE OUTLET IS COVERED.
2. REPLACE STONE AS NEEDED TO ENSURE DEWATERING.

WAKE COUNTY NORTH CAROLINA
EFFECTIVE: 01/31/08

STANDARD SILT FENCE OUTLET

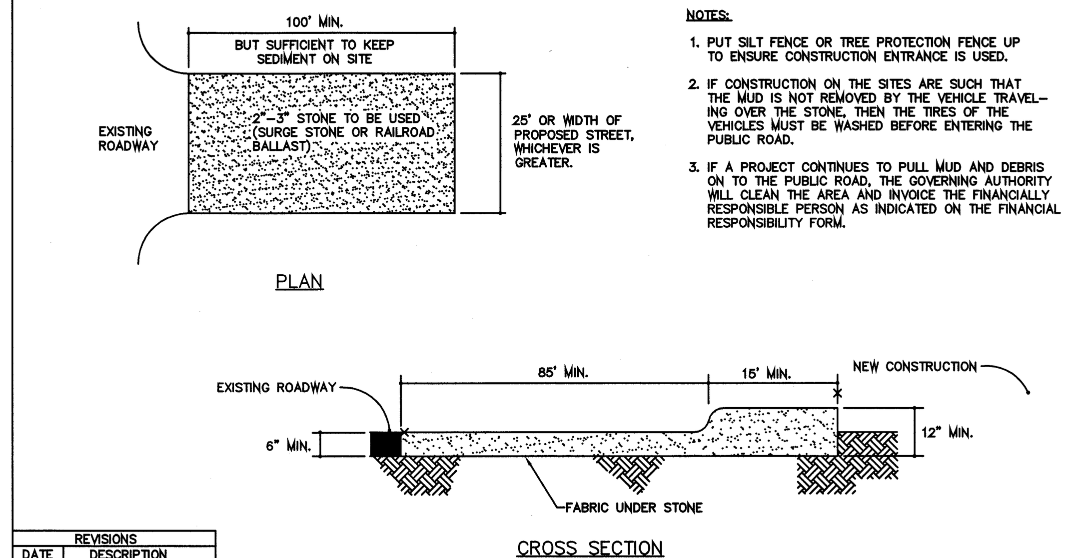

NOTES:
1. PUT SILT FENCE OR TREE PROTECTION FENCE UP TO ENSURE CONSTRUCTION ENTRANCE IS USED.
2. IF CONSTRUCTION ON THE SITES ARE SUCH THAT THE MUD IS NOT REMOVED BY THE VEHICLE TRAVELING OVER THE STONE, THEN THE TIRES OF THE VEHICLES MUST BE WASHED BEFORE ENTERING THE PUBLIC ROAD.
3. IF A PROJECT CONTINUES TO PULL MUD AND DEBRIS ON TO THE PUBLIC ROAD, THE GOVERNING AUTHORITY WILL CLEAN THE AREA AND INVOICE THE FINANCIALLY RESPONSIBLE PERSON AS INDICATED ON THE FINANCIAL RESPONSIBILITY FORM.

REVISIONS	
DATE	DESCRIPTION

CONSTRUCTION ENTRANCE | 7

MAINTAIN ALL EROSION DEVICES A MINIMUM OF WEEKLY AND AFTER EACH RUNOFF RAIN PRODUCING EVENT

TEMPORARY SEEDING SPECIFICATIONS

BETWEEN MAY 1 AND AUGUST 15, ADD 40 LB./AC. GERMAN MILLET. PRIOR TO MAY 1 OR AFTER AUGUST 15, ADD 120 LB/ACRE RYE (GRAIN).

SOIL AMENDMENTS
APPLY LIME AND FERTILIZER ACCORDING TO TESTS, OR APPLY 2,000 LB/AC GROUND AGRICULTURE LIMESTONE AND 750 LB/AC 10-10-10 FERTILIZER.

MULCH
APPLY 4,000 LB/AC GRAIN STRAW OR EQUIVALENT COVER OF ANOTHER SUITABLE MULCHING MATERIAL. ANCHOR MULCH BY TACKING WITH ASPHALT, ROVING OR NETTING. NETTING IS THE PREFERRED ANCHORING METHOD ON STEEP SLOPES.

MAINTENANCE
REFERTILIZE IF GROWTH IS NOT FULLY ADEQUATE. RESEED, REFERTILIZE AND MULCH IMMEDIATELY FOLLOWING EROSION OR OTHER DAMAGE.

PERMANENT SEEDING SPECIFICATIONS

SEEDING MIXTURE

SPECIES	RATE (LBS/AC)
TALL FESCUE	80
SERICEA LESPEDEZA	30
KOBE LESPEDEZA	10
PENSACOLA BAHIAGRASS	50

SEEDING NOTES
1. FROM SEPT. 1 – MAR. 1, USE UNSCARIFIED SERICEA SEED.
2. ON POORLY DRAINED SITES OMIT SERICEA AND INCREASE KOBE TO 30 LB/AC.
3. WHERE A NEAT APPEARANCE IS DESIRED, OMIT SERICEA AND INCREASE KOBE

NURSE PLANTS
BETWEEN APR. 15 AND AUG. 15, ADD 10 LB/AC GERMAN MILLET OR 15 LB/AC SUDANGRASS. PRIOR TO MAY 1 OR AFTER AUG. 15, ADD 25 LB/AC RYE (GRAIN).

SEEDING DATES

	BEST	POSSIBLE
EARLY SPRING:	FEB. 15 – MAR. 20	FEB. 15 – APR. 30
FALL:	SEPT. 1 – SEPT. 30	SEPT. 1 – OCT. 31

SOIL AMENDMENTS
APPLY LIME AND FERTILIZER ACCORDING TO SOIL TESTS, OR APPLY 3,000-5,000 LB/AC SUDANGRASS. PRIOR TO MAY 1 OR AFTER AUG. 15, ADD 25 LB/AC RYE (GRAIN).

MULCH
APPLY 4,000 LB/AC GRAIN STRAW OR EQUIVALENT COVER OF ANOTHER SUITABLE MULCH. ANCHOR STRAW BY TACKING WITH ASPHALT, NETTING, OR ROVING OR BY CRIMPING WITH A MULCH ANCHORING TOOL. A DISK WITH BLADES SET NEARLY STRAIGHT CAN BE USED AS A MULCH ANCHORING TOOL.

MAINTENANCE
IF GROWTH IS LESS THAN FULLY ADEQUATE, REFERTILIZE THE SECOND YEAR, ACCORDING TO SOIL TESTS OR TOPDRESS WITH 500 LB/AC 10-10-10 FERTILIZER. MOW AS NEEDED WHEN SERICEA IS OMITTED FROM THE MIXTURE. RESEED, FERTILIZE, AND MULCH DAMAGED AREAS IMMEDIATELY.

CONSTRUCTION SEQUENCE

1. Obtain a land disturbing permit. Schedule a preconstruction conference with the Environmental Engineer CHATHAM COUNTY 919-545-8343
2. Install gravel construction entrance pad, temporary silt & temporary silt fence outlet. per detail on sheet C-6. Install any other measures as shown on the approved plan. Clear only as necessary to install these devices. Seed, mulch & anchor temporary devices immediately after their construction.
3. Call (919) 545-8343 for an on site inspections by the Environmental Engineer to obtain a Certificate of Compliance.
4. Begin clearing and grubbing. Maintain devices as needed. Rough grade site.
5. Stabilize slopes as areas are brought up to finish grade with vegetation, ditch linings, etc. Seed and mulch exposed/disturbed areas within 15 days, of any phase of completion of construction or if site is idle for 15 days or more per the Chatham County erosion control ordinance.
6. When construction is complete and all areas are stabilized completely, call (919) 545-8343 for an inspection by the Environmental Engineer.
7. If site is approved, remove temporary silt fence and gravel construction entrance. Seed out any resulting bare areas or pave any resulting bare areas. All remaining permanent erosion control devices (such as velocity dissipators) should now be installed. Remove the temporary silt fences and seed any resulting bare areas.
8. When vegetation has become established, call for final site inspection by Environmental Engineer, (919) 545-8343. Obtain a Certificate of Completion.

SEEDING SCHEDULE

(REVISED: 1-1-86)

Shoulders, Side Ditches, Slopes (Max 3:1)

DATE	TYPE	PLANTING RATE
Aug 15 – Nov 1	Tall Fescue	300 lbs/acre
Nov 1 – Mar 1	Tall Fescue	300 lbs/acre
	& Abruzzi Rye	25 lbs/acre
Mar 1 – Apr 15	Tall Fescue	300 lbs/acre
Apr 15 – Jun 30	Hulled Common Bermudagrass	25 lbs/acre
Jul 1 – Aug 15	Tall Fescue and	120 lbs/acre
	***Browntop Millet	35 lbs/acre
	***or Sorghum-Sudan Hybrids	30 lbs/acre

Slopes (3:1 to 2:1)

DATE	TYPE	PLANTING RATE
Mar 1 – Jun 1	Sericea Lespedeza (scarified) &	50 lbs/acre
(Mar 1 – Apr 15)	Add Tall Fescue	120 lbs/acre
(Mar 1 – Jun 30)	Or Add Weeping Lovegrass	10 lbs/acre
(Mar 1 – Jun 30)	Or Add Hulled Common Bermudagrass	25 lbs/acre
Jun 1 – Sep 1	***Tall Fescue and	120 lbs/acre
	***Browntop Millet	35 lbs/acre
	***or Sorghum-Sudan Hybrids	30 lbs/acre
Sep 1 – Mar 1	Sericea Lespedeza (unhulled-unscarified) and Tall Fescue	70 lbs/acre 120 lbs/acre
(Nov 1 – Mar 1)	Add Abruzzi Rye	25 lbs/acre

Consult Conservation Engineer or Soil Conservation Service for additional information concerning other alternatives for vegetation of denuded areas. The above vegetation rates are those which do well under local conditions; other seeding rate combinations are possible.

***Temporary – Reseed according to optimum season for desired permanent vegetation. Do not allow temporary cover to grow over 12" in height before mowing, otherwise fescue may be shaded out.

SEEDING SCHEDULE

SEEDBED PREPARATION

1.) CHISEL COMPACTED AREAS AND SPREAD TOPSOIL 3 INCHES DEEP OVER ADVERSE SOIL CONDITIONS, IF AVAILABLE.
2.) RIP THE ENTIRE AREA TO 6 INCHES DEPTH.
3.) REMOVE ALL LOSE ROCK, ROOTS, AND OTHER OBSTRUCTIONS LEAVING SURFACE REASONABLY SMOOTH AND UNIFORM.
4.) APPLY AGRICULTURAL LIME, FERTILIZER, AND SUPERPHOSPHATE UNIFORMLY AND MIX WITH SOIL (SEE BELOW*).
5.) CONTINUE TILLAGE UNTIL A WELL-PULVERIZED, FIRM REASONABLY UNIFORM SEEDBED IS PREPARED 4 TO 6INCHES DEEP.
6.) SEED ON A FRESHLY PREPARED SEEDBED AND COVER SEED LIGHTLY WITH SEEDING EQUIPMENT OR CULTIPACK AFTER SEEDING.
7.) MULCH IMMEDIATELY AFTER SEEDING ANDANCHOR MULCH.
8.) INSPECT ALL SEEDED AREAS AND MAKE NECESSARY REPAIRS OR RESEEDINGS WITHIN THE PLANTING SEASON, IF POSSIBLE.IF STAND SHOULD BE OVER 60% DAMAGED, REESTABLISH FOLLOWING ORIGINAL LIME, FERTILIZER AND SEEDING RATES.
9.) CONSULT CONVERSATION INSPECTOR ON MAINTENANCE TREATMENT AND FERTILIZATION AFTER PERMANENT COVER IS ESTABLISHED.

* APPLY: AGRICULTURAL LIMESTONE – 2 TONS/ ACRES (3 TONS/ ACRE IN CLAY SOILS)
FERTILIZER – 1,000 lbs. / ACRE –10-10-10
SUPERPHOSPHATE– 500 lbs> / ACRE –20% ANALYSIS
MULCH –2 TONS / ACRE – SMALL GRAIN STRAW
ANOTHER – ASPHALT EMULSION @ 300 GALS./ ACRE

SEEDBED PREPARATION

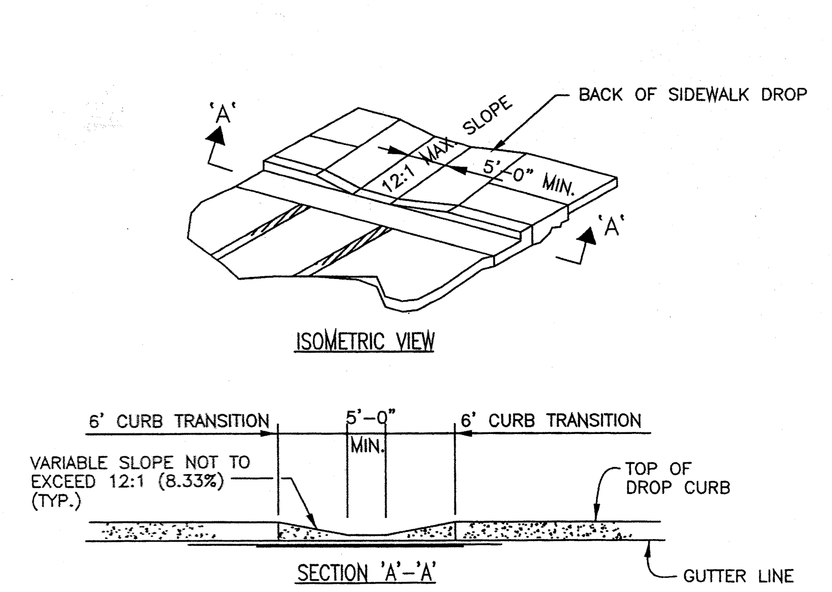

STANDARD WHEELCHAIR RAMP DETAILS
N.T.S.

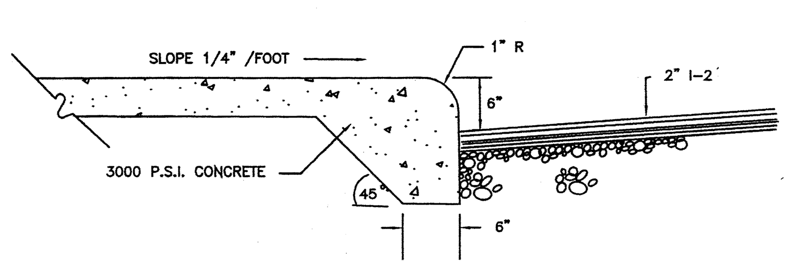

PRIVATE
CONCRETE WALK W/ TURN DOWN CURB
NO SCALE

EROSION CONTROL DETAILS

NORTH CAROLINA REGISTERED LANDSCAPE ARCHITECT 354 BLAKELY B. TAYLOR 12-1-14

BLAKELY DESIGN GROUP
Landscape Architecture Site Planning
700 Exposition Place, Suite 105, Raleigh, North Carolina 27615
Telephone (919) 870-1868 Fax (919) 870-0752

EROSION CONTROL DETAILS

WALKER AUTO PARTS
630 EAST STREET, U.S.HWY 64 BUSINESS, PITTSBORO, N.C.

DATE OCT 28, 14
SCALE AS SHOWN
DRAWN BTB
JOB NO.
REVISIONS

SHEET
C6.0

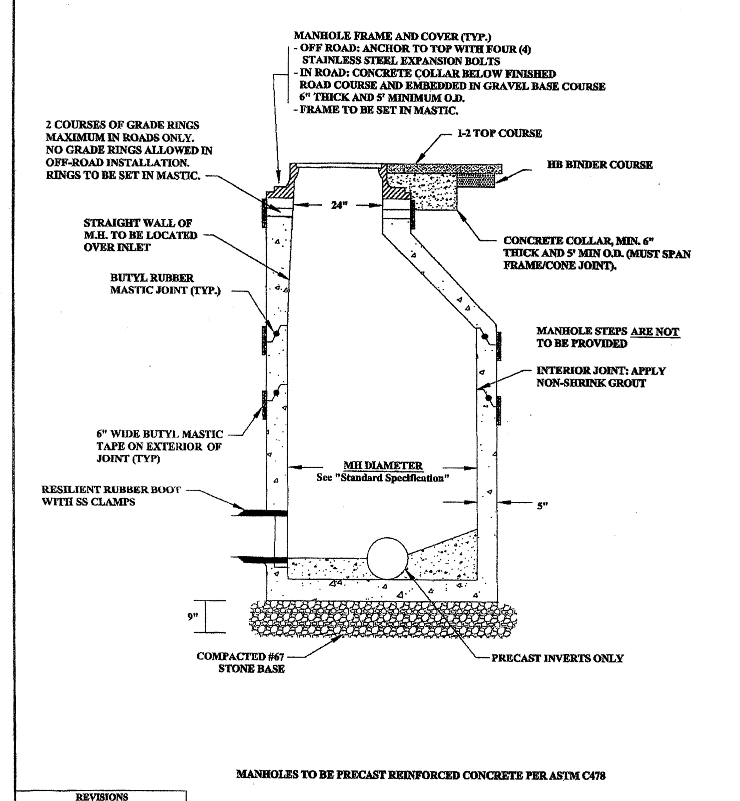

MANHOLES TO BE PRECAST REINFORCED CONCRETE PER ASTM C478

REVISIONS — DATE | DESCRIPTION

PRECAST MANHOLE

NOT TO SCALE

TOWN OF PITTSBORO
STANDARD CONSTRUCTION DETAIL
STANDARD NO. 1

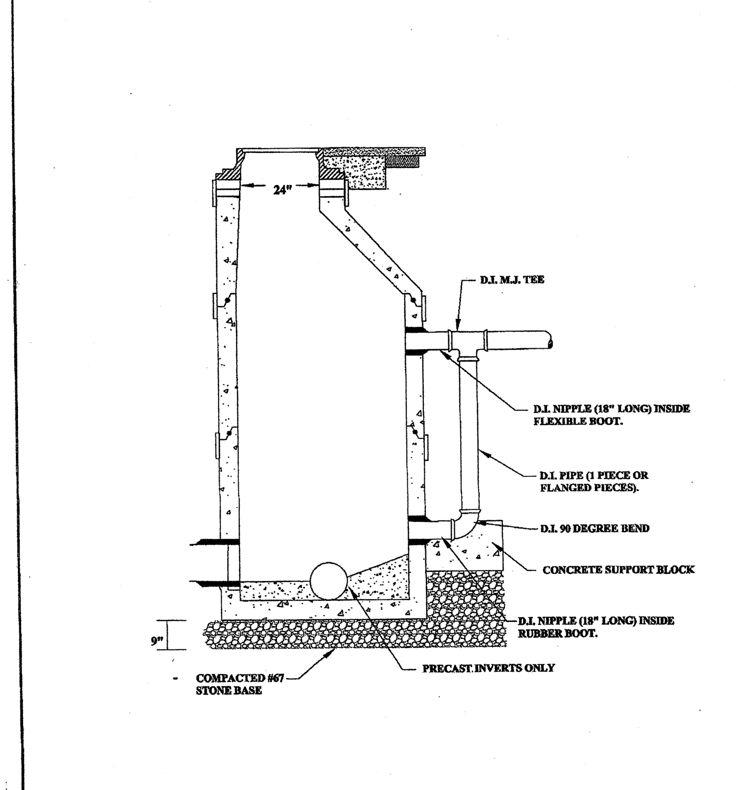

REVISIONS — DATE | DESCRIPTION

OUTSIDE DROP MANHOLE

NOT TO SCALE

TOWN OF PITTSBORO
STANDARD CONSTRUCTION DETAIL
STANDARD NO. 2

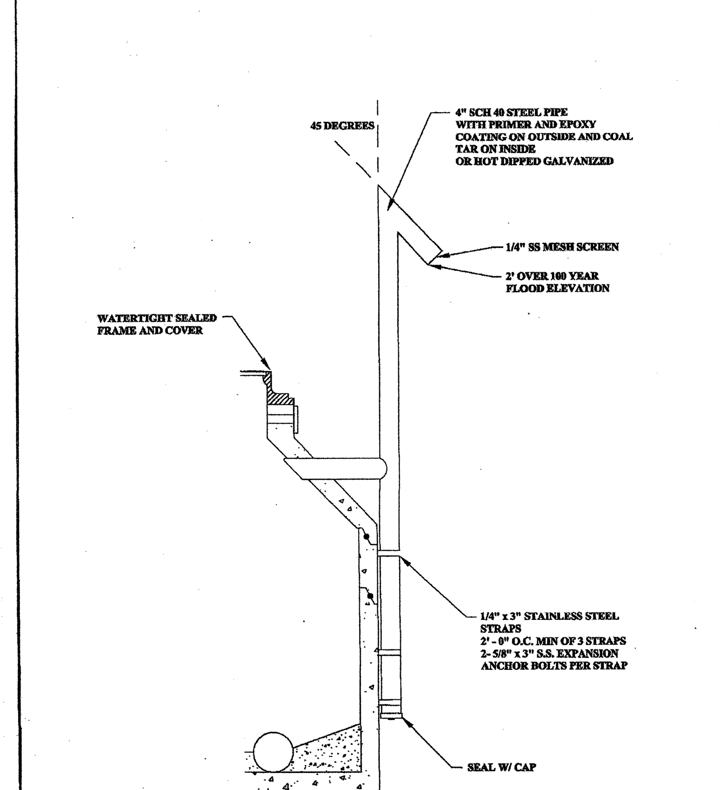

REVISIONS — DATE | DESCRIPTION

SEALED AND VENTED SEWER MANHOLE

NOT TO SCALE

TOWN OF PITTSBORO
STANDARD CONSTRUCTION DETAIL
STANDARD NO. 3

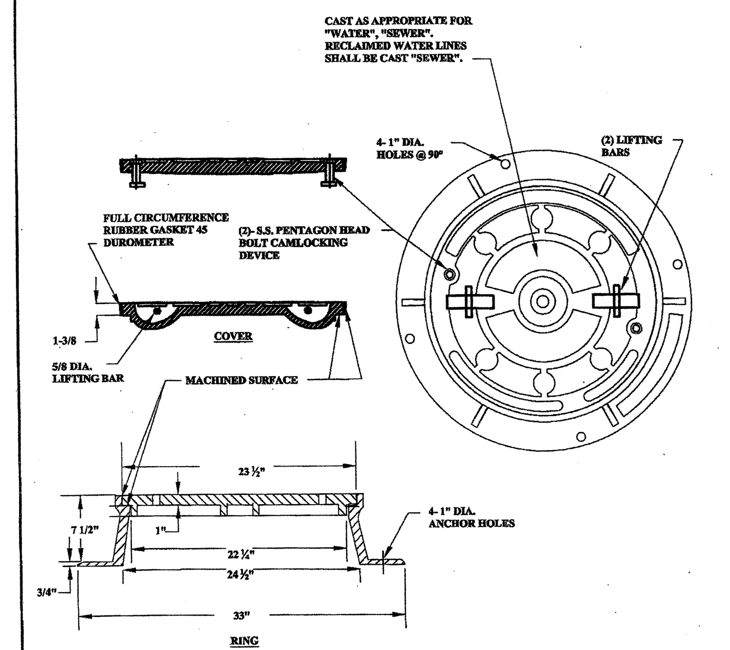

NOTES:

1. ALL CASTINGS TO BE FREE FROM SAND HOLES NO PLUGGING ALLOWED.
2. MACHINE ALL CONTACT SURFACES BETWEEN RING AND COVER.
3. MINIMUM WEIGHTS: COVER-120 LBS. RING-190 LBS.
4. ASTM A48. MIN. CLASS 30. TRAFFIC BEARING TO BE MIN.CLASS 35.
5. ALL DIMENSIONS +/-

REVISIONS — DATE | DESCRIPTION

STANDARD WATERTIGHT MANHOLE FRAME & COVER

NOT TO SCALE

TOWN OF PITTSBORO
STANDARD CONSTRUCTION DETAIL
STANDARD NO. 5

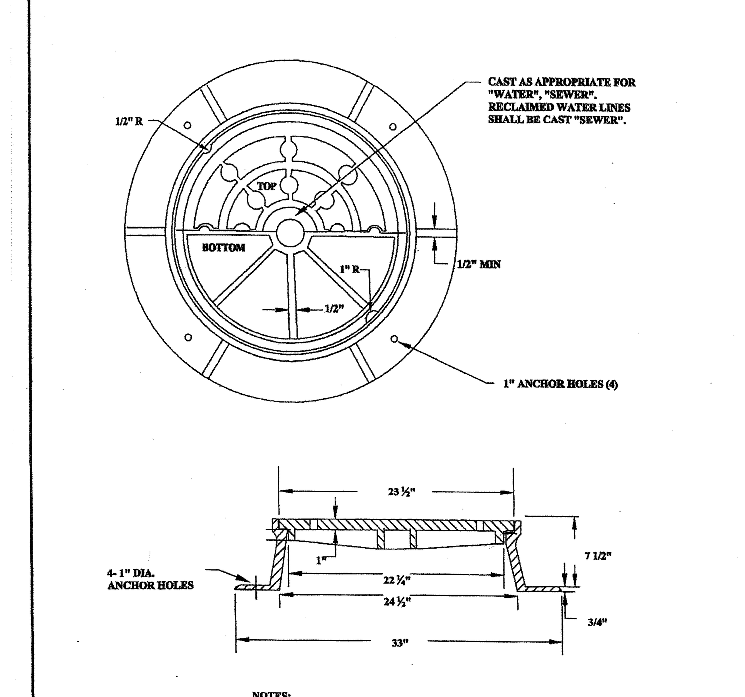

NOTES:

1. ALL CASTINGS TO BE FREE FROM SAND HOLES. NO PLUGGING ALLOWED.
2. MACHINE ALL CONTACT SURFACES BETWEEN RING AND COVER.
3. PROVIDE TWO PICK HOLES IN COVER.
4. PROVIDE TWO 1" DIA VENT HOLES IN COVER.
5. MINIMUM WEIGHTS: COVER - 120 LBS. RING - 190 LBS.
6. ASTM A48. MIN. CLASS 30. TRAFFIC BEARING TO BE MIN. CLASS 35.
7. ALL DIMENSIONS +/-

REVISIONS — DATE | DESCRIPTION

STANDARD MANHOLE FRAME & COVER

NOT TO SCALE

TOWN OF PITTSBORO
STANDARD CONSTRUCTION DETAIL
STANDARD NO. 4

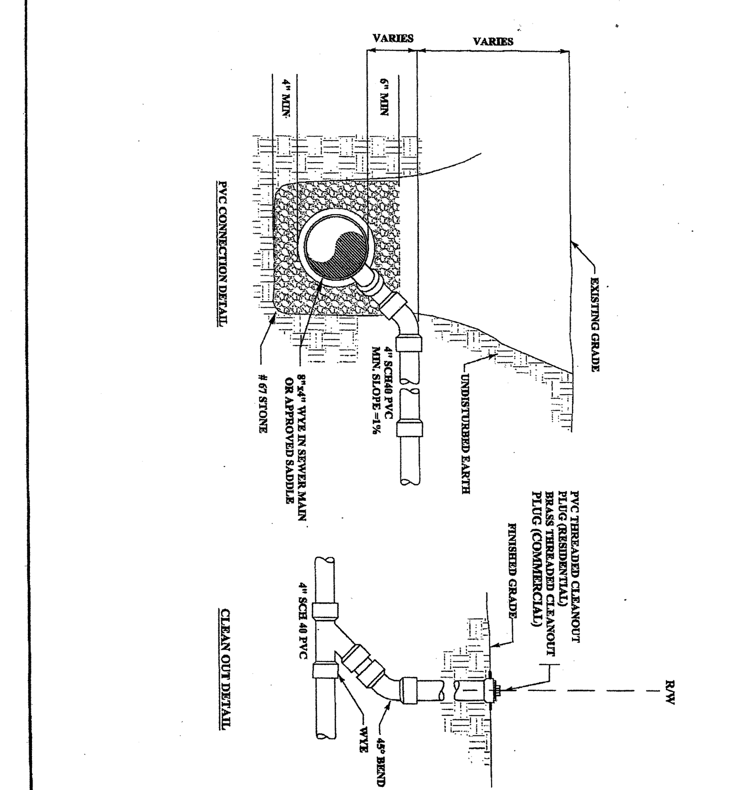

REVISIONS — DATE | DESCRIPTION

SEWER SERVICE CONNECTION AND CLEAN OUT DETAIL

NOT TO SCALE

TOWN OF PITTSBORO
STANDARD CONSTRUCTION DETAIL
STANDARD NO. 14

NOTE:
1 - SPACING FOR SPIDERS TO BE 2 PER 18 FOOT LENGTH OF PIPE, ONE SUPPORT AT EACH END.
2 - ENTIRE SPIDER ASSEMBLY TO BE BITUMINOUS COATED AFTER FABRICATION.
3 - FIELD MODIFY AS REQUIRED TO PROVIDE DESIGN SLOPE IN CARRIER PIPE.

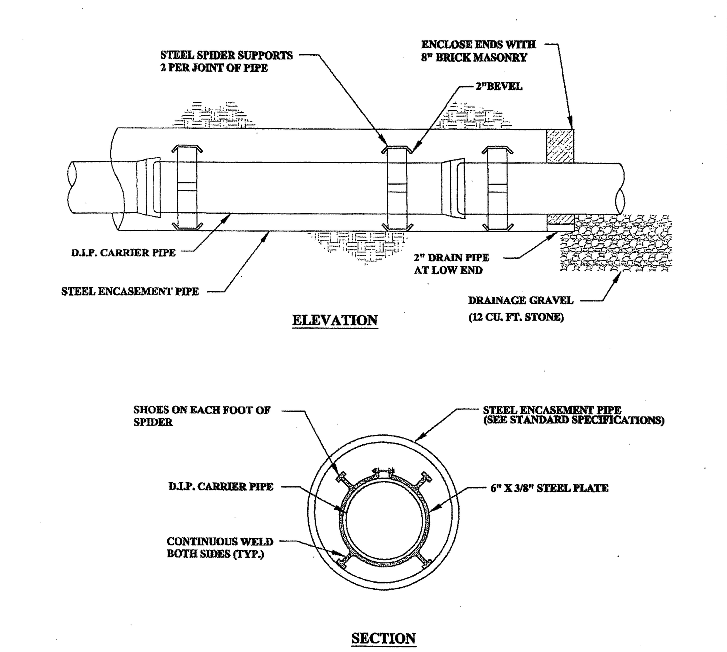

REVISIONS — DATE | DESCRIPTION

STEEL CASING PIPE, CARRIER PIPE AND SPIDERS

NOT TO SCALE

TOWN OF PITTSBORO
STANDARD CONSTRUCTION DETAIL
STANDARD NO. 15

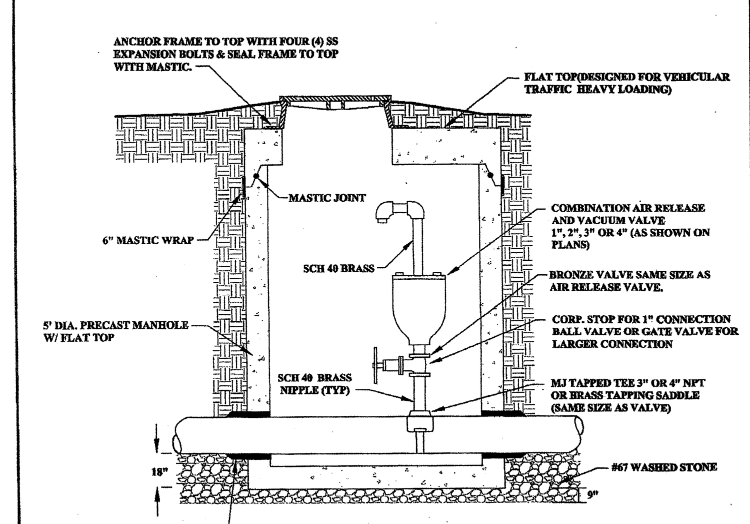

NOTE:

1. FOR EASEMENT INSTALLATIONS, FINISH TO GRADE INDICATED ON PLANS USING PRECAST CONE SECTION.
2. AIR RELEASE MANHOLES WILL BE SUBJECT TO VACUUM TESTING.
3. INSTALL VALVE OFFSET FROM MANHOLE LID TO ALLOW MAINTENANCE ACCESS.

REVISIONS — DATE | DESCRIPTION

COMBINATION AIR RELEASE AND VACUUM VALVES

NOT TO SCALE

TOWN OF PITTSBORO
STANDARD CONSTRUCTION DETAIL
STANDARD NO. 8

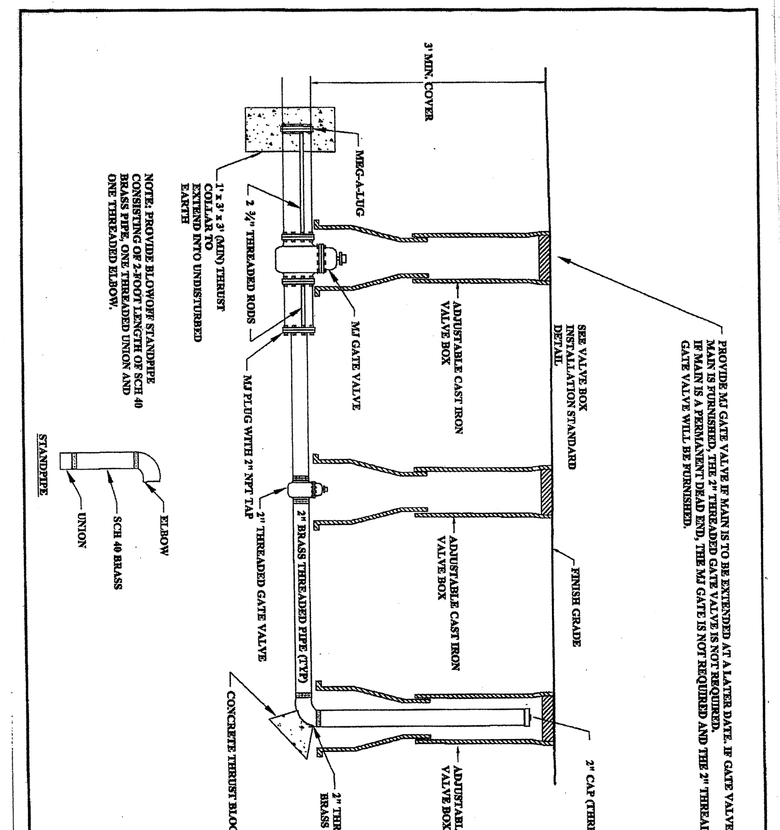

REVISIONS — DATE | DESCRIPTION

BLOW OFF ASSEMBLY

NOT TO SCALE

TOWN OF PITTSBORO
STANDARD CONSTRUCTION DETAIL
STANDARD NO. 13

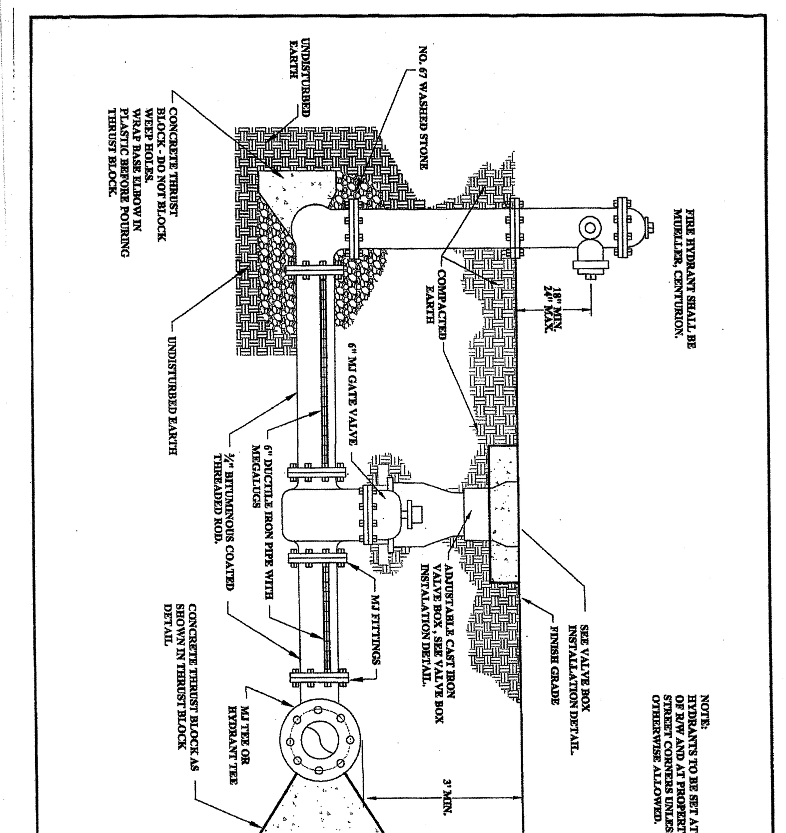

REVISIONS — DATE | DESCRIPTION

FIRE HYDRANT INSTALLATION ASSEMBLY

NOT TO SCALE

TOWN OF PITTSBORO
STANDARD CONSTRUCTION DETAIL
STANDARD NO. 6

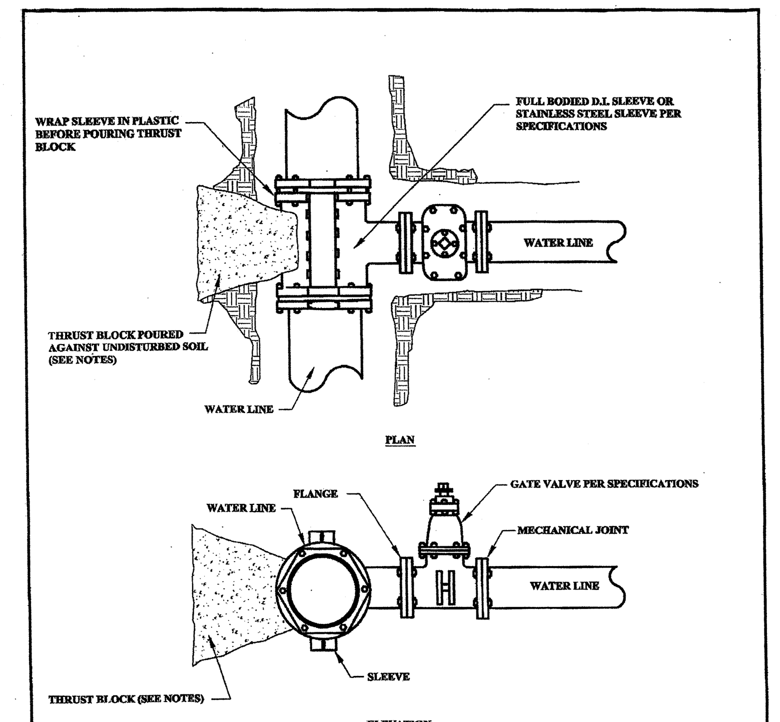

NOTES:

1. TAPPING SLEEVE WILL BE MUIELLER #H-615 OR APPROVED EQUAL.
2. CONCRETE THRUST BLOCK WILL NOT CONTACT BOLTS OR ENDS OF MECHANICAL JOINT FITTINGS.
3. SEE APPROPRIATE STANDARD DETAILS FOR THRUST BLOCK AND THRUST BLOCK DIMENSIONS.

REVISIONS — DATE | DESCRIPTION

TAPPING SLEEVE AND VALVE ASSEMBLY

NOT TO SCALE

TOWN OF PITTSBORO
STANDARD CONSTRUCTION DETAIL
STANDARD NO. 7

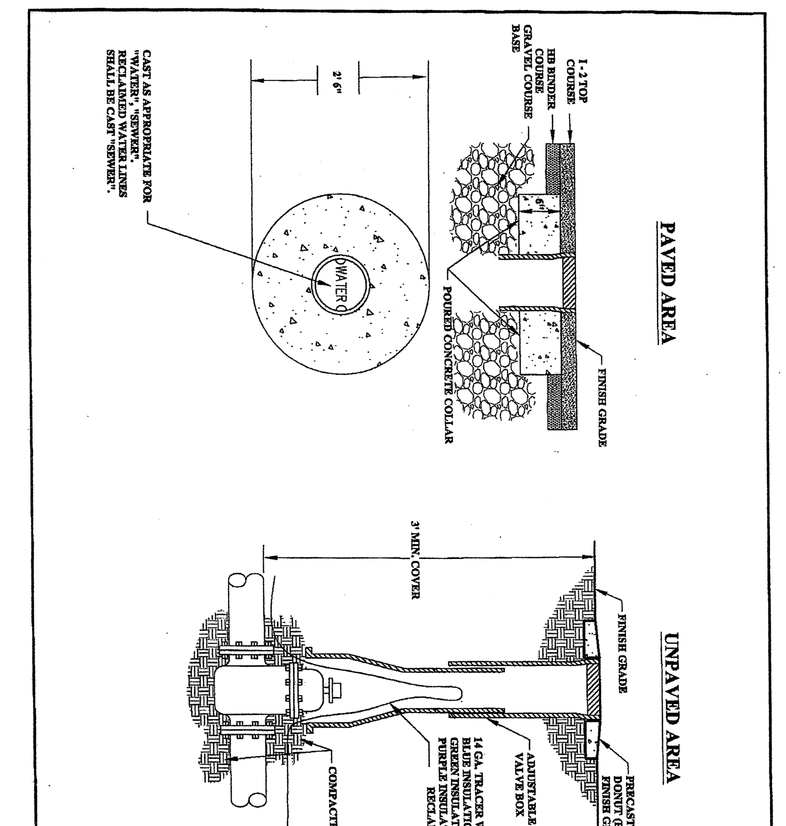

REVISIONS — DATE | DESCRIPTION

VALVE BOX INSTALLATION

NOT TO SCALE

TOWN OF PITTSBORO
STANDARD CONSTRUCTION DETAIL
STANDARD NO. 11

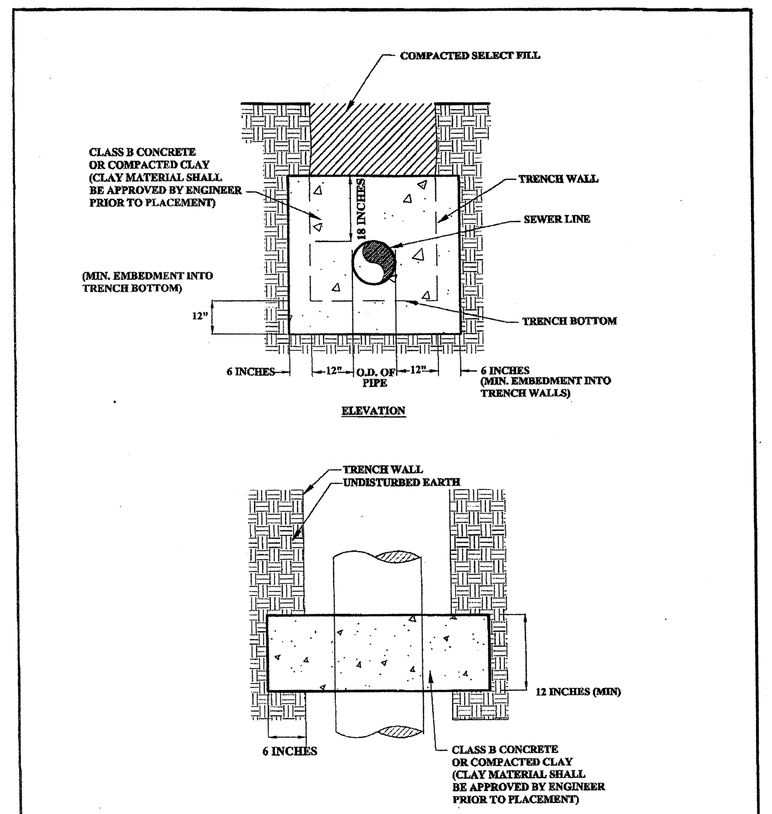

REVISIONS — DATE | DESCRIPTION

ANTI-SEEP COLLAR

NOT TO SCALE

TOWN OF PITTSBORO
STANDARD CONSTRUCTION DETAIL
STANDARD NO. 16

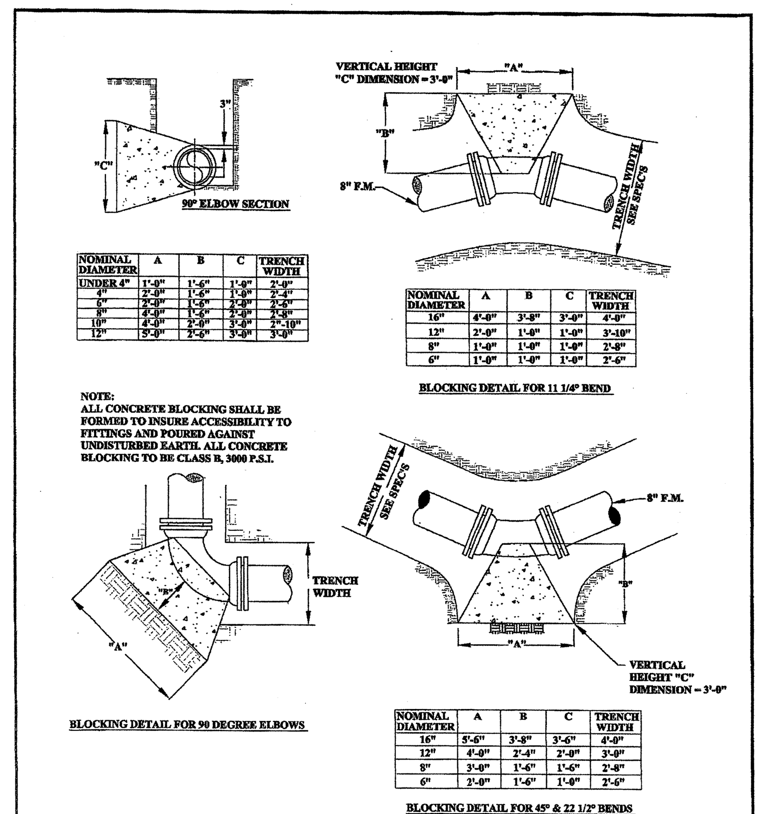

NOMINAL DIAMETER	A	B	C	TRENCH WIDTH
UNDER 4"	1'-0"	1'-6"	1'-0"	2'-0"
4"	2'-0"	1'-6"	1'-0"	2'-4"
6"	2'-0"	1'-6"	2'-0"	2'-6"
8"	4'-0"	1'-6"	2'-0"	2'-8"
10"	4'-0"	2'-0"	3'-0"	2'-10"
12"	5'-0"	2'-6"	3'-0"	3'-0"

NOMINAL DIAMETER	A	B	C	TRENCH WIDTH
16"	4'-0"	3'-8"	3'-0"	4'-0"
12"	2'-0"	1'-0"	1'-0"	3'-10"
8"	1'-0"	1'-0"	1'-0"	2'-8"
6"	1'-0"	1'-0"	1'-0"	2'-6"

NOTE:
ALL CONCRETE BLOCKING SHALL BE FORMED TO INSURE ACCESSIBILITY TO FITTINGS AND POURED AGAINST UNDISTURBED EARTH. ALL CONCRETE BLOCKING TO BE CLASS B, 3000 P.S.I.

NOMINAL DIAMETER	A	B	C	TRENCH WIDTH
16"	5'-6"	3'-8"	3'-6"	4'-0"
12"	4'-0"	2'-4"	2'-0"	3'-0"
8"	3'-0"	1'-6"	1'-6"	2'-8"
6"	2'-0"	1'-6"	1'-0"	2'-6"

REVISIONS — DATE | DESCRIPTION

THRUST BLOCKING

NOT TO SCALE

TOWN OF PITTSBORO
STANDARD CONSTRUCTION DETAIL
STANDARD NO. 17

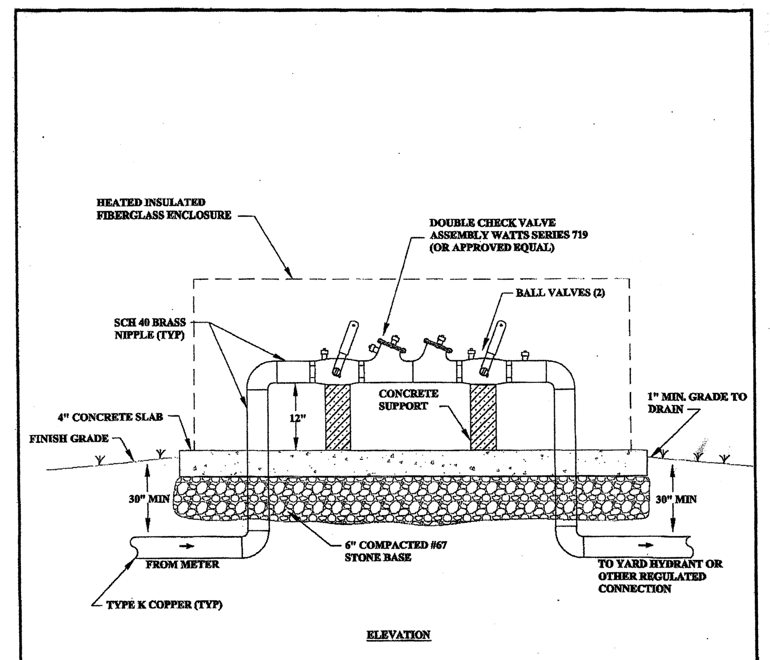

NOTE:

ENGINEER TO DETERMINE SIZE OF WATER SUPPLY AND DOUBLE CHECK VALVE ASSEMBLY.

REVISIONS — DATE | DESCRIPTION

DOUBLE CHECK VALVE BACKFLOW ASSEMBLY

NOT TO SCALE

TOWN OF PITTSBORO
STANDARD CONSTRUCTION DETAIL
STANDARD NO. 9

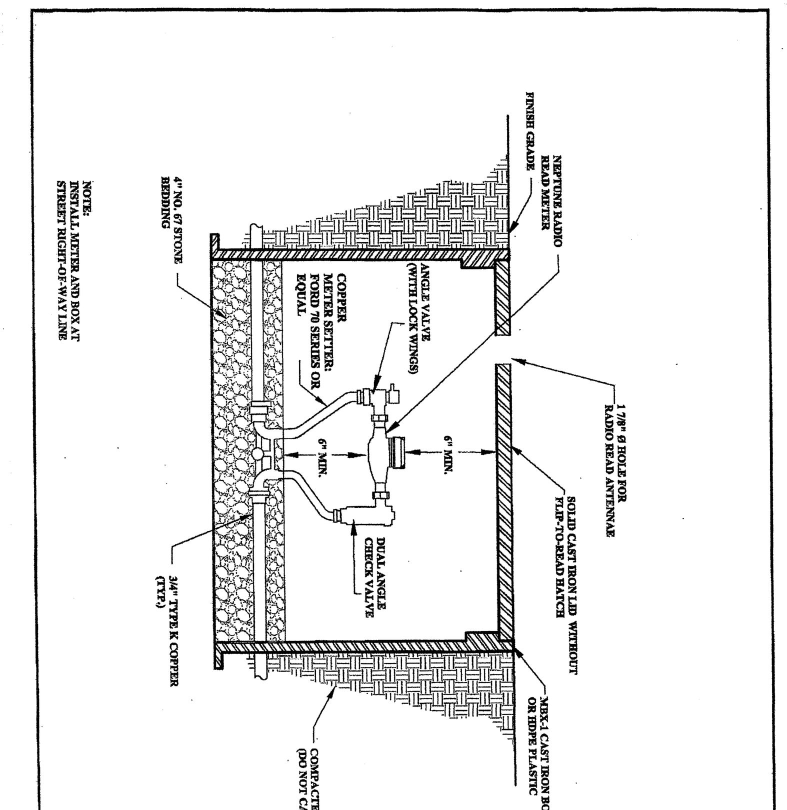

REVISIONS — DATE | DESCRIPTION

METER AND METER BOX INSTALLATION

NOT TO SCALE

TOWN OF PITTSBORO
STANDARD CONSTRUCTION DETAIL
STANDARD NO. 12

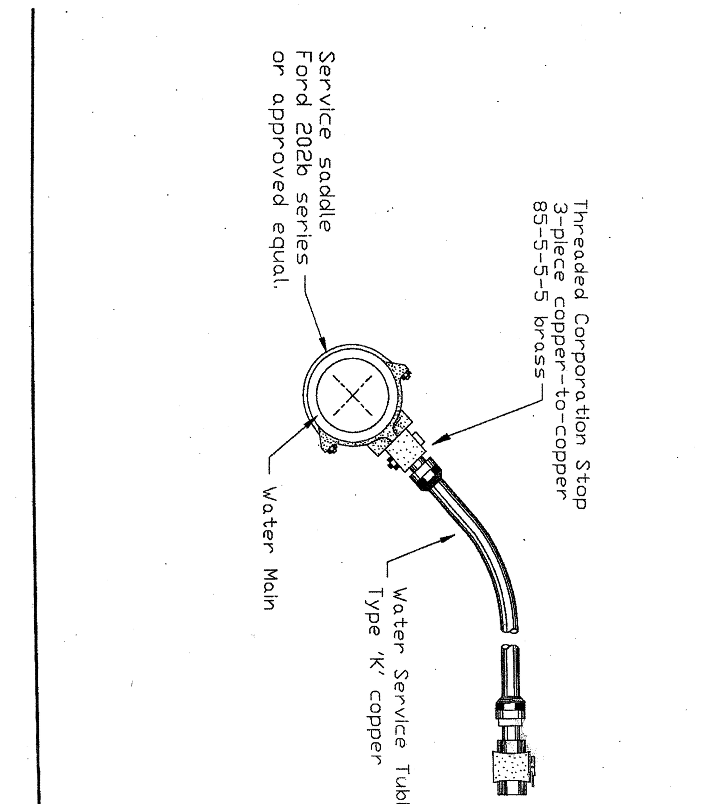

REVISIONS — DATE | DESCRIPTION

SERVICE CONNECTION

NOT TO SCALE

TOWN OF PITTSBORO
STANDARD CONSTRUCTION DETAIL
STANDARD NO. 18

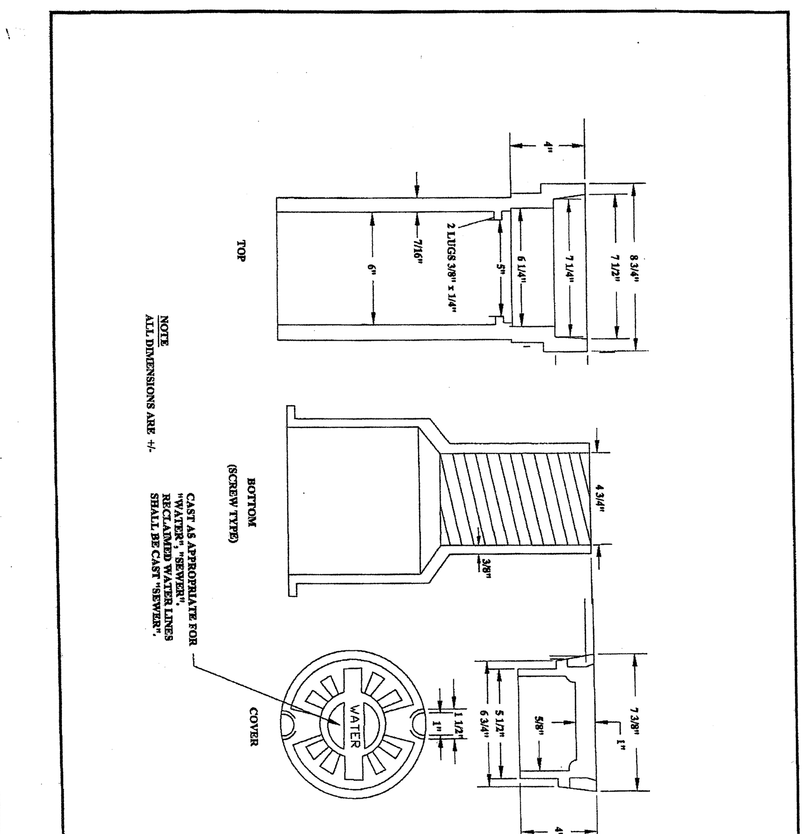

REVISIONS — DATE | DESCRIPTION

STANDARD VALVE BOX

NOT TO SCALE

TOWN OF PITTSBORO
STANDARD CONSTRUCTION DETAIL
STANDARD NO. 10

NORTH CAROLINA LANDSCAPE ARCHITECT REGISTERED 354 B. TAYLOR BLAKELY
12-1-14

BLAKELY DESIGN GROUP
Landscape Architecture Site Planning
700 Exposition Place, Suite 105, Raleigh, North Carolina 27615
Telephone (919) 870-1868 Fax (919) 870-0752
E-Mail - taylor@blakelydesign.net

UTILITY DETAILS

WALKER AUTO PARTS

630 EAST STREET, U.S. HIGHWAY 64 BUSINESS, PITTSBORO, N.C.

DATE OCT.28, 14
SCALE 1"=20'
DRAWN BTB
JOB NO.

REVISIONS
11-30-14 BTB REVISED PER CHATHAM CO. & TOWN OF PITTSBORO STAFF COMMENTS

SHEET
C7.0

F.C. 06.11.2014 PJC 1:100,0004

MAIL TO: EVANS ENGINEERING, INC. 4609 DUNDAS DRIVE GREENSBORO, N.C. 27407

PLAT BOOK 2014 PAGE 141

FILED Jun 25, 2014 08:23:35 am
PLAT SLIDE 02014 — 0141
INSTRUMENT 05951
FILED CHATHAM COUNTY, NC
TREVA B. BEAGREVES
REGISTER OF DEEDS

PLAT BOOK 22 PAGE 08

N W E S

U.S. HIGHWAY 64
EAST STREET
(150' RIGHT OF WAY)

(EDGE OF PAVEMENT)

(EDGE OF PAVEMENT)

EIP

N84°00'10"W 164.60' (TIE)

CONTROL CORNER EIP

S84°00'10"E 185.88'

CONTROL CORNER EIP

GLADYS SEARS, MARCIA S. REGAN
& JOHN R. SEARS TRUSTEES
DEED BOOK 801 PAGE 652

EXISTING ASPHALT PARKING LOT

(EDGE OF PAVEMENT)

EXISTING ASPHALT DRIVE

N05°18'23"E 153.19'

OUTPARCEL ONE
AREA: 0.72 ACRE
31,498 S.F.

S09°30'30"W 176.84'

(EDGE OF PAVEMENT)

DR. MARTIN LUTHER KING JR. DRIVE
SR 1965
(80' PUBLIC R/W)

(EDGE OF PAVEMENT)

EIP

N18°15'58"W 74.95'

EIP

N83°47'49"W 162.96'

EIP

S09°35'14"W 69.62' (TIE)

EXISTING ASPHALT DRIVE

EXISTING ASPHALT PARKING LOT

R/W MONUMENT

GLADYS SEARS, MARCIA S. REGAN
& JOHN R. SEARS TRUSTEES
DEED BOOK 801 PAGE 652

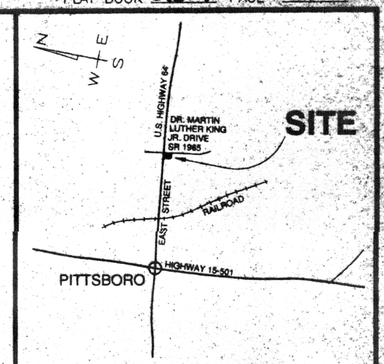

VICINITY MAP
NO SCALE

SITE DATA:

PIN: 9751-06-6500.000

DEED REFERENCE: DEED BOOK 801 PAGE 652

TOTAL AREA: 31,498 S.F.
0.72 ACRE

ZONING:

LOTS: 1

LEGEND

EIP	EXISTING IRON PIPE
NIP	NEW IRON PIPE
R/W	RIGHT OF WAY
P.B.	PLAT BOOK
PG.	PAGE
D.B.	DEED BOOK
AC.	ACRES
C/L	CENTERLINE
D.M.U.E.	DRAINAGE MAINTENANCE & UTILITY EASEMENT
D.M.D.	DOUBLE MERIDIAN DISTANCE
N.C.G.S.	NORTH CAROLINA GEODETIC SURVEY
C.E.	COMMON ELEMENTS
D.E.	DRAINAGE EASEMENT
D.&U.E.	DRAINAGE & UTILITY EASEMENT
U.E.	UTILITY EASEMENT
ESM'T	EASEMENT
B.U.A.	BUILT UPON AREA
L.E.	LANDSCAPE EASEMENT
S.E.	SIGHT EASEMENT
NTS	NOT TO SCALE

OWNER NAME AND ADDRESS
THE GLADYS M. SEARS REVOCABLE TRUST ETAL.
C/O MARCIA S. REGAN
4602 JEFFERSON WOOD COURT
GREENSBORO, NORTH CAROLINA 27410

CERTIFICATE OF MINOR PLAT APPROVAL

I hereby certify that the Minor Subdivision shown on this plat does not involve the creation of new public roads or any change in existing public roads, the subdivision shown is in all respects in compliance with the Town of Pittsboro's Ordinances and Regulations, and that this plat is approved, subject to its being recorded in the Chatham County Registry within sixty days of the date below.

Stuart W. Basse — Planning Director
6/19/14 — Date

SURVEYOR'S

"I, ANTHONY D. LESTER, certify that this plat was drawn under my supervision from an actual survey made under my supervision (deed description recorded in Book 801, Page 652, etc.)(Other); that the boundaries not surveyed are clearly indicated as drawn from information found in Book SEE, Page MAP; that the ratio of precision as calculated is 1: 50,000+; that this plat was prepared in accordance with G.S. 47-30 as amended. Witness my original signature, registration number and Seal this 12th day of JUNE, A.D., 20 14.

THIS SURVEY CREATES A SUBDIVISION OF LAND WITHIN THE AREA OF A COUNTY OR MUNICIPALITY THAT HAS AN ORDINANCE THAT REGULATES PARCELS OF LAND.

Anthony D. Lester — SEAL OR STAMP
L-4521

NORTH CAROLINA PROFESSIONAL L-4537 6-17-14 LAND SURVEYOR ANTHONY D. LESTER

NOTES:

1. AREA DETERMINED BY D.M.D.
2. BOUNDARY LINES NOT SURVEYED ARE SHOWN DASHED.
3. ALL PROPERTY CORNERS ARE MARKED BY IRON PIPES (UNLESS OTHERWISE SHOWN).
4. THIS SURVEY WAS COMPLETED WITHOUT THE BENEFIT OF A TITLE SEARCH.
5. ALL DISTANCES SHOWN ON THIS PLAT ARE HORIZONTAL FEET AS STAKED IN THE FIELD.

Review Officer's Certificate
STATE OF NORTH CAROLINA, COUNTY OF CHATHAM

I, Lynda Hall, Review Officer for Chatham County, certify that the map or plat to which this certification is affixed meets all statutory requirements for recording.

Lynda Hall Review Officer, 6-25-14 Date

MINOR SUBDIVISION PLAT FOR
OUTPARCEL ONE
WHICH IS A
PORTION OF

630 EAST STREET

CENTER TOWNSHIP ~ CHATHAM COUNTY
PITTSBORO, NORTH CAROLINA
JUNE 17, 2014

30 0 15 30 60 120
(IN FEET)
1 inch = 30 ft.

NORTH CAROLINA REGISTERED PROFESSIONAL SURVEYOR SEAL L-4537 ANTHONY D. LESTER

Evans Engineering, Inc.
Since 1974
Engineers Surveyors Planners
License #C0168

4609 Dundas Drive
Greensboro,
North Carolina 27407
Fax 336-854-8876
Phone 336-854-8877

DRAWN BY: PJC DWG. H:\DRAWINGS\Chatham Projects\

2014-141

2014-141

FC 10.13.95 PJC

PLAT BOOK 22 PAGE 8

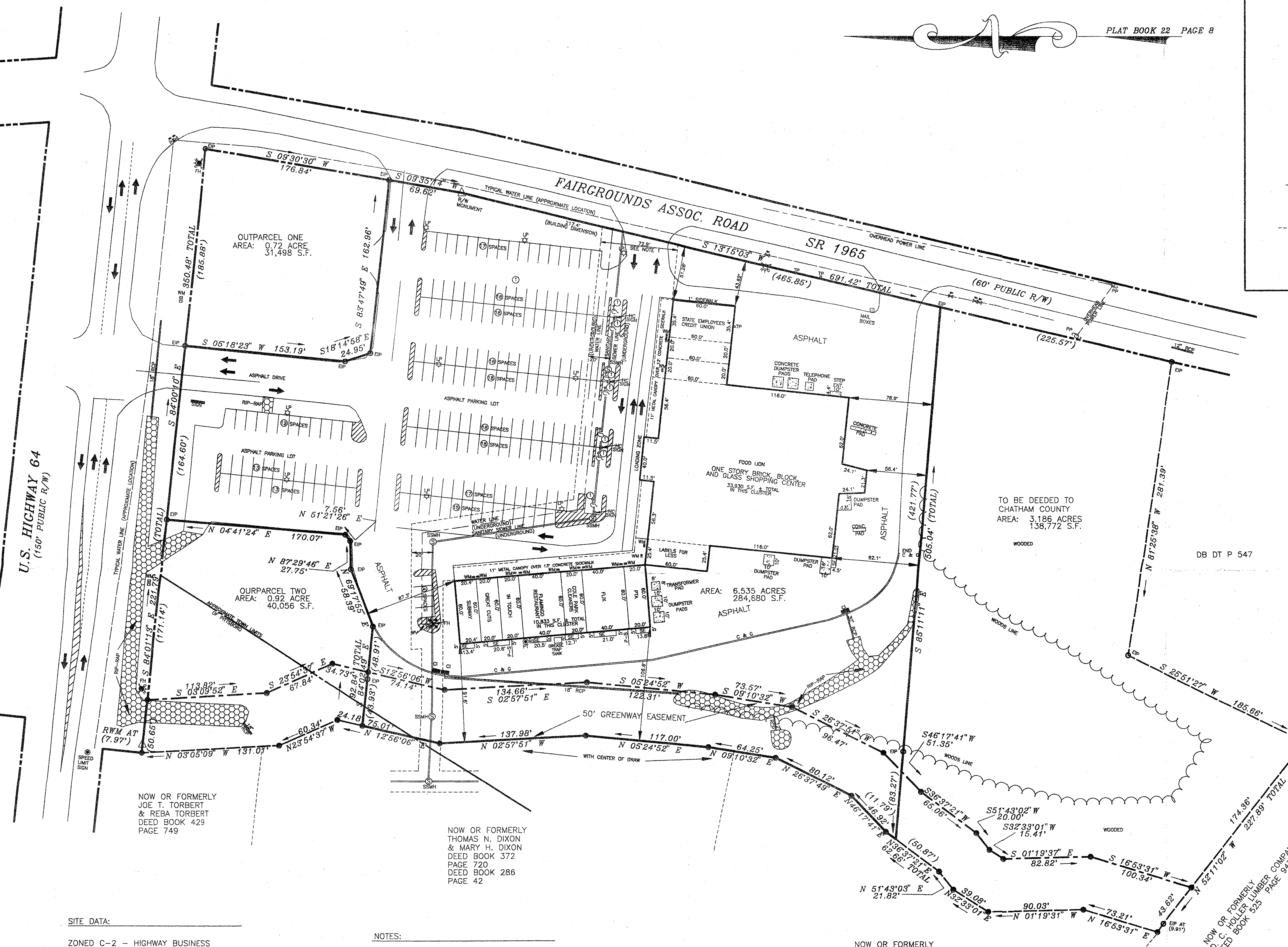

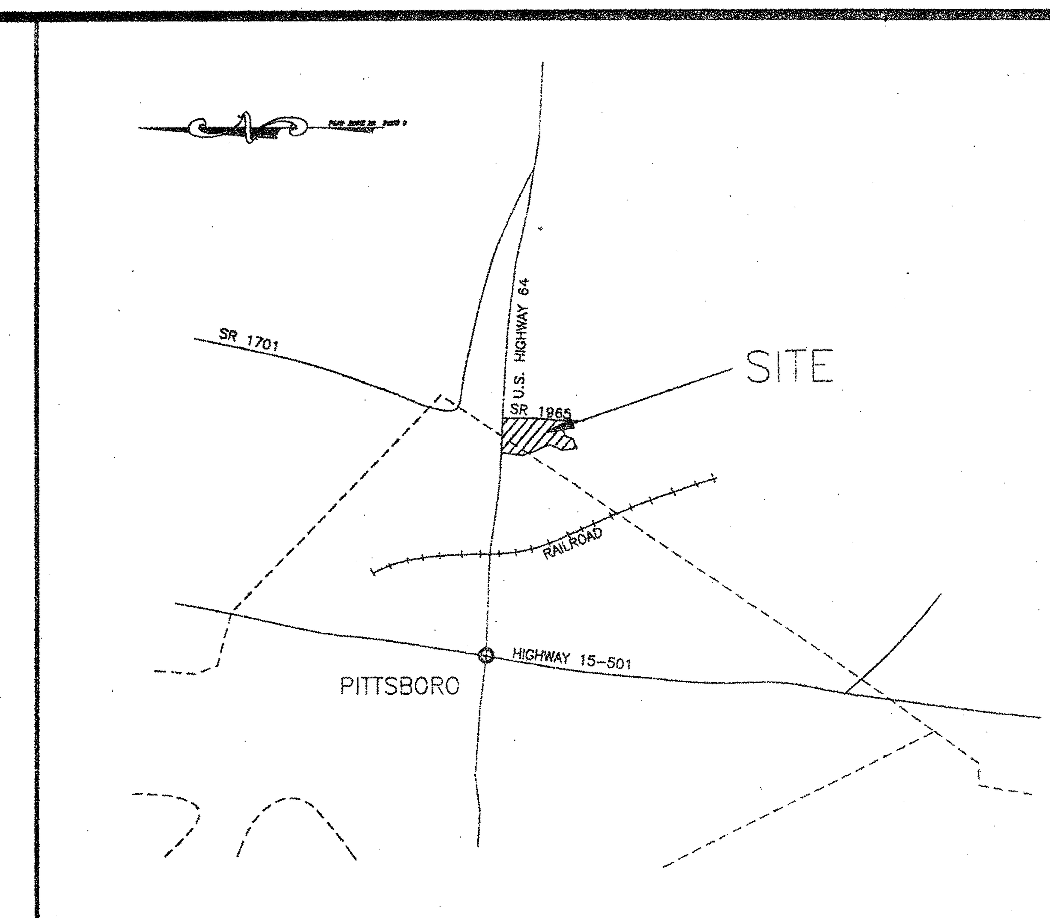

VICINITY MAP NO SCALE

LEGEND:

EIP	EXISTING IRON PIPE
PP	POWER POLE
WV	WATER VALVE
GV	GAS VALVE
TP	TELEPHONE PEDESTAL
CONC.	CONCRETE
SSMH	SANITARY SEWER MANHOLE
P	POST
FH	FIRE HYDRANT
WM	WATER METER
RWM	RIGHT OF WAY MONUMENT
RCP	REINFORCED CONCRETE PIPE
LP	LIGHT POLE
CI	CURB INLET
SE	STEPS ENTRY
PT	PROPANE TANK
P-S	POWER SERVICE
SF	SQUARE FEET
DMD	DOUBLE MERIDIAN DISTANCE
NCGS	NORTH CAROLINA GEODETIC SURVEY
♿	HANDICAP SPACE

SITE DATA:

ZONED C-2 – HIGHWAY BUSINESS
FRONT SETBACK = 20'
SIDESTREET SETBACK = 20'
REAR YARD SETBACK = 10'
SIDE YARD SETBACK = NO MINIMUM

TOTAL PARKING SPACES = 206
REGULAR SPACES = 199
HANDICAP SPACES = 7

UTILITY NOTICE

THE UNDERGROUND UTILITIES SHOWN HAVE BEEN LOCATED FROM FIELD SURVEY INFORMATION, RECORDED EASEMENTS, AND EXISTING DRAWINGS. THE SURVEYOR FURTHER DOES NOT WARRANT THAT THE UNDERGROUND UTILITIES SHOWN ARE IN THE EXACT LOCATION INDICATED ALTHOUGH HE DOES CERTIFY THAT THEY ARE LOCATED AS ACCURATELY AS POSSIBLE FROM THE INFORMATION AVAILABLE. THE SURVEYOR HAS NOT PHYSICALLY LOCATED UNDERGROUND UTILITIES.

NOTES:

1. EASEMENT WIDTH GREATER THAN 70' DUE TO SITE PARAMETERS (NORTH AND EAST EASEMENT LINES ARE 20' OFFSET AND PARALLEL TO EXISTING CENTERLINE OF SANITARY SEWER AND SOUTH AND WEST EASEMENT LINES LOCATED 1.0' FROM THE FACE OF EXISTING BRICK STRUCTURE): SEE SURVEY OF CHATHAM COMMONS GREENWAY AND UTILITY EASEMENTS BY SHELLEY SURVEYING COMPANY DATED 10-03-90.
2. NO NCGS MONUMENT FOUND WITHIN 2000' OF PROPERTY.
3. AREA DETERMINED BY D.M.D.
4. BEARINGS SHOWN ON THIS SURVEY BASED ON PLAT BOOK 22 PAGE 8. TO MATCH N.C. GRID BEARINGS, ROTATE SURVEY BEARINGS 03°15'37" IN A COUNTER-CLOCKWISE DIRECTION.
5. OUTPARCEL PROPERTY LINES ARE 1.0' OFF THE EDGE OF PAVEMENT OF PARKING LOT.

LEGAL DESCRIPTION – EXHIBIT A

BEGINNING ON AN EXISTING IRON PIPE IN THE SOUTHERN MARGIN OF U.S. HIGHWAY 64, SAID IRON PIPE BEING LOCATED N 84 DEG 00 MIN 10 SEC W 185.88 FEET FROM THE SOUTHWEST QUADRANT OF U. S. HIGHWAY 64 AND SR 1965, THENCE RUNNING S 05 DEG 18 MIN 23 SEC W 153.19 FEET TO AN EXISTING IRON PIPE; THENCE S 18 DEG 14 MIN 58 SEC E 24.95 FEET TO AN EXISTING IRON PIPE; THENCE S 83 DEG 47 MIN 49 SEC E 162.96 FEET TO AN EXISTING IRON PIPE IN THE WESTERN MARGIN OF SR 1965; THENCE WITH THE WESTERN MARGIN OF SR 1965 S 09 DEG 35 MIN 14 SEC W 69.62 FEET TO A RIGHT OF WAY MONUMENT; THENCE CONTINUING WITH THE WESTERN MARGIN OF SR 1965 S 13 DEG 15 MIN 03 SEC W 465.85 FEET TO AN IRON PIPE; THENCE LEAVING THE RIGHT OF WAY OF SR 1965 N 85 DEG 11 MIN 11 SEC W 505.04 FEET TO A POINT IN THE CENTER OF A DRAW; THENCE RUNNING WITH THE CENTER OF THE DRAW THE FOLLOWING COURSES AND DISTANCES N 36 DEG 37 MIN 21 SEC E 11.79 FEET TO A POINT; N 46 DEG 17 MIN 41 SEC E 46.92 FEET TO A POINT; N 26 DEG 37 MIN 49 SEC E 80.12 FEET TO A POINT; THENCE N 09 DEG 10 MIN 32 SEC E 64.25 FEET TO A POINT; THENCE N 05 DEG 24 MIN 52 SEC E 117.00 FEET TO A POINT; THENCE N 02 DEG 57 MIN 51 SEC W 137.98 FEET TO A POINT; THENCE N 12 DEG 56 MIN 06 SEC E 75.01 FEET TO A POINT; THENCE LEAVING THE DRAW S 84 DEG 02 MIN 49 SEC E 92.84 FEET TO AN EXISTING IRON PIPE; THENCE N 69 DEG 17 MIN 55 SEC E 58.39 FEET TO AN EXISTING IRON PIPE; THENCE N 87 DEG 29 MIN 46 SEC E 27.75 FEET TO AN EXISTING IRON PIPE; THENCE N 51 DEG 21 MIN 26 SEC E 7.56 FEET TO AN EXISTING IRON PIPE; THENCE N 04 DEG 41 MIN 24 SEC E 170.07 FEET TO AN EXISTING IRON PIPE IN THE SOUTHERN MARGIN OF U.S. HIGHWAY 64; THENCE WITH THE SOUTHERN MARGIN OF U.S. HIGHWAY 64 S 84 DEG 00 MIN 10 SEC E 164.60 FEET TO THE POINT AND PLACE OF BEGINNING CONTAINING 6.535 ACRES (284,680 S.F.) AND LYING IN CENTER TOWNSHIP, CHATHAM COUNTY, NORTH CAROLINA.

SURVEYOR'S CERTIFICATE

RE: SURVEY JOB NO. 546-04, DATED OCTOBER 12, 1995.
PROPERTY LEGAL DESCRIPTION ATTACHED AS EXHIBIT A

THIS SURVEY WAS MADE FOR THE BENEFIT OF H. V. McCOY & COMPANY (OWNER), THE UNION CENTRAL LIFE INSURANCE COMPANY (LENDER), AND FIDELITY NATIONAL TITLE INSURANCE COMPANY OF PENNSYLVANIA (TITILE COMPANY).

I HEREBY CERTIFY THAT SAID SURVEY:
1. WAS PREPARED BY ME OR UNDER MY SUPERVISION;
2. WAS MADE ON THE GROUND AND IS CORRECT;
3. DELINEATES ALL LOT LINES AND SHOWS THE LOCATION AND DIMENSIONS OF ALL IMPROVEMENTS ON THE SUBJECT PROPERTY AND THE DISTANCE THEREFROM TO THE NEAREST FACING EXTERIOR PROPERTY LINES OF THE SUBJECT PROPERTY;
4. SHOWS THE LOCATION OF ALL VISIBLE OR RECORDED EASEMENTS, RIGHTS-OF-WAY AND OTHER MATTERS OF RECORD AFFECTING OR BENEFITING THE SUBJECT PROPERTY AS DISCLOSED BY MORTGAGEE TITLE INSURANCE COMMITMENT NUMBER 95G28506-M ISSUED BY FIDELITY NATIONAL TITLE INSURANCE COMPANY OF PENNSYLVANIA;
5. SHOWS THE MEANS OF ACCESS AND LOCATION AND RIGHTS-OF-WAY BOUNDARIES OF ALL ADJOINING STREETS TOGETHER WITH THE WIDTH OF RIGHTS OF WAY AND NAME THEREOF;
6. DENOTES ANY AND ALL BUILDING SET-BACK LINES ESTABLISHED BY APPLICABLE ZONING AND/OR OTHER GOVERNMENTAL ORDINANCES OR REGULATIONS.

I DO FURTHER CERTIFY THAT:
7. THERE ARE NO ENCROACHMENTS UPON THE BOUNDARY LINES OF THE SUBJECT PROPERTY OR UPON ANY EASEMENT AREAS EXCEPT FOR THE FOLLOWING MATTERS SHOWN ON THE SURVEY: NONE VISIBLE;
8. INGRESS AND EGRESS TO THE SUBJECT PROPERTY IS PROVIDED BY U.S. HIGHWAY 64 AND SR 1965 (FAIRGROUNDS ASSOC. ROAD); UPON WHICH PROPERTY FRONTS, THE SAME BEING PAVED AND DEDICATED PUBLIC RIGHTS-OF-WAY ACCEPTED AND MAINTAINED BY THE NORTH CAROLINA STATE HIGHWAY COMM.;
9. THE TITLE LINES AND LINES OF ACTUAL POSSESSION ARE THE SAME;
10. THE SUBJECT PROPERTY DOES NOT SERVE AND IS NOT SERVICED BY ANY ADJOINING PROPERTY FOR DRAINAGE, INGRESS AND EGRESS OR ANY OTHER PURPOSE;
11. THE STREET ADDRESS OF THE SUBJECT PROPERTY IS U.S. HIGHWAY 64 EAST AND SR 1965;
12. THE TOTAL SQUARE FOOT AREA OF THE SUBJECT PROPERTY IS: 284,680 SF;
13. THE TOTAL SQUARE FOOT AREA OF THE BUILDINGS LOCATED ON THE SUBJECT PROPERTY IS 44,763 SF;
14. THE TOTAL NUMBER OF PARKING SPACES LOCATED ON THE SUBJECT PROPERTY IS 206; AND
15. THE SUBJECT PROPERTY DESCRIBED HEREON DOES NOT LIE IN A 100 YEAR FLOOD PLAIN, A FLOOD WAY OR AN AREA THAT HAS BEEN IDENTIFIED BY THE SECRETARY OF HOUSING AND URBAN DEVELOPMENT OR ANY OTHER GOVERNMENTAL AUTHORITY AS A FLOOD HAZARD AREA UNDER THE NATIONAL FLOOD INSURANCE ACT OF 1968 (24 CFR S1901.1), AS AMENDED (SUCH DETERMINATION HAVING BEEN MADE FROM A PERSONAL REVIEW OF FLOOD MAP NUMBER 370299 0125 B DATED 07-16-91 WHICH IS THE LATEST FLOOD MAP AVAILABLE FOR THE SUBJECT PROPERTY.

I DO FURTHER CERTIFY THAT THE SURVEY REPRESENTED HEREON MEETS THE REQUIREMENTS OF THE STATE OF NORTH CAROLINA, AND SUCH OTHER RULES AND REGULATIONS AS MAY BE APPLICABLE TO SURVEYS PERFORMED IN SAID STATE.

THE UNDERSIGNED EXPRESSLY UNDERSTANDS AND AGREES THAT (A) THIS CERTIFICATE IS MADE TO INDUCE LENDER TO EXTEND CREDIT SECURED BY A MORTGAGE COVERING THE SUBJECT PROPERTY AND TO INDUCE THE TITLE COMPANY TO ISSUE A POLICY OF TITLE INSURANCE INSURING THE VALIDITY AND PRIORITY OF SUCH MORTGAGE; (B) BOTH LENDER AND TITLE COMPANY ARE ENTITLED TO RELY ON THIS PLAT OF SURVEY AS BEING TRUE AND ACCURATE IN ALL RESPECTS AND UPON THIS CERTIFICATE AS BEING TRUE AND ACCURATE; AND (C) THE CONSIDERATION PAID TO THE UNDERSIGNED FOR THE PREPARATION AND CERTIFICATION OF SUCH SURVEY HAS BEEN PAID, IN PART, FOR THE BENEFIT OF LENDER AND TITLE COMPANY AND IN ANTICIPATION OF THEIR RELIANCE.

OWNER
H. V. McCOY & COMPANY, INC.
P.O. BOX 20847
GREENSBORO,
NORTH CAROLINA 27420

EVANS ENGINEERING, INC.

SEAL

RICHARD T. EVANS, RLS
N.C.R.L.S. NO. 1721
DATE: 10-12-95

DEED REFERENCE: DEED BOOK 570 PAGE 927
PLAT BOOK 90 PAGE 17

AS BUILT SURVEY FOR

CHATHAM COMMONS

CENTER TOWNSHIP — CHATHAM COUNTY
SCALE: 1" = 50' — NORTH CAROLINA
DRAWN BY: PJC — DATE: 10-12-95

GRAPHIC SCALE

50 0 25 50 100 200

(IN FEET)
1 inch = 50 ft.

EVANS ENGINEERING, INC. ENGINEERS-PLANNERS-SURVEYORS
4609 DUNDAS DRIVE GREENSBORO, NORTH CAROLINA 27407
PHONE: (910) 854-8876 FAX: (910) 854-8877

DRAWING: PITTSHOP